www.HandA-Accessories.com

HONDA

INSTALLATION INSTRUCTIONS

Accessory	Application	Publications No.
INTERIOR PRIVACY CURTAIN P/N 08R13-SCV-100	ELEMENT	All 24293
		Issue Date DEC 2002

Keep this information in the glove box for future reference.

PARTS LIST

Front privacy curtain

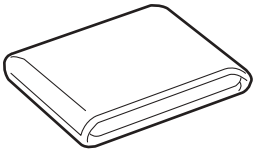

Rear privacy curtain

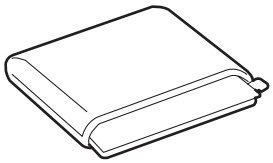

2 Suction cups

INSTALLATION

Installing the Front Privacy Curtain

1. Turn the storage bag inside out and spread the front privacy curtain with the storage bag facing the inside.
2. Attach the center hook of the privacy curtain to the rearview mirror stay as shown.

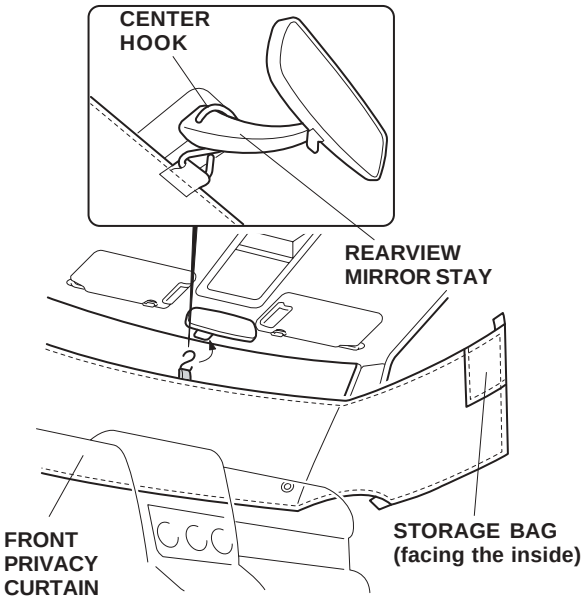

3. Spread the privacy curtain over the right side of the front windshield and passenger's window. Slide the front tab between the the dashboard and the A pillar and slide the other tab between the rear door striker cover and the headliner.

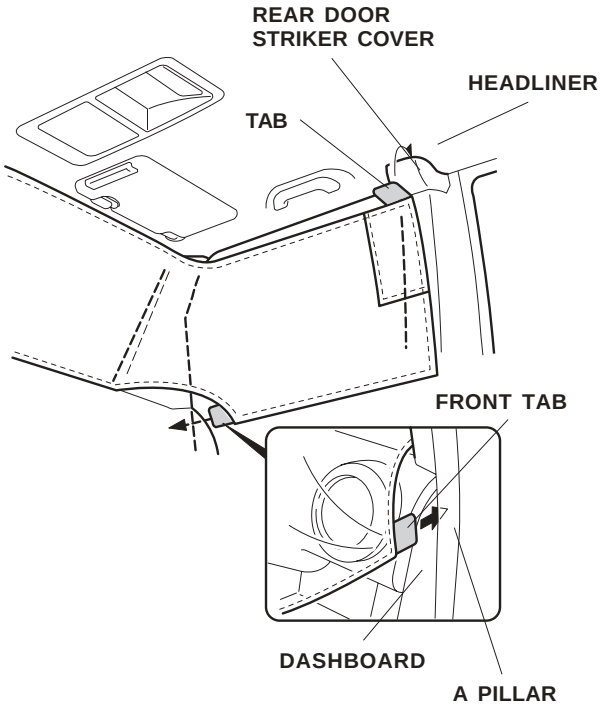

4. Repeat step 3 to install the privacy curtain on the left side of the vehicle.
5. Lower the right and left sun visors to hold the privacy curtain in position.

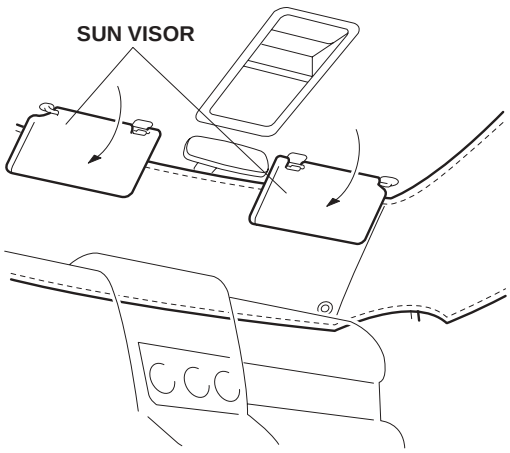

© 2002 American Honda Motor Co., Inc - All Rights Reserved.

6. Push the suction cups into the right and left rings on the curtain and attach them to the front windshield.

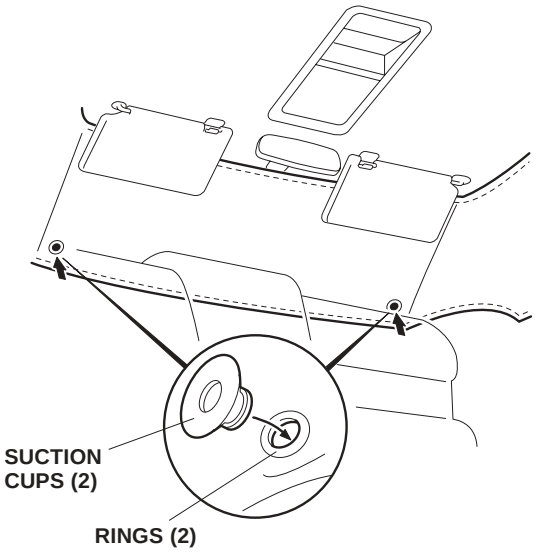

Storing the Front Privacy Curtain

Fold the curtain and store it in the storage bag sewn to the curtain as described:

7. Spread the curtain with the storage bag facing down, then fold the curtain in two as shown.

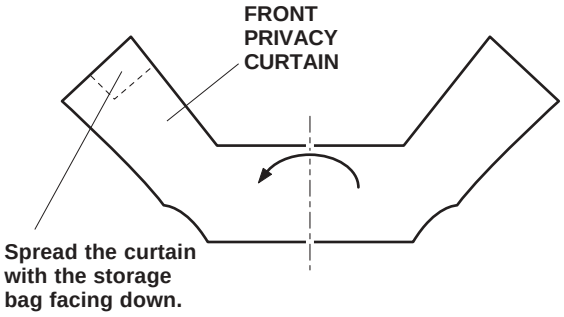

8. Align the two corners, then fold the curtain as described.

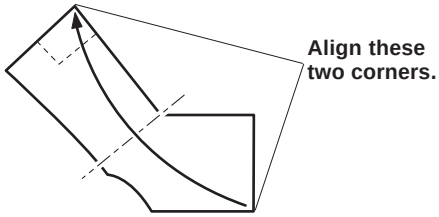

9. Fold back the corner of the curtain.

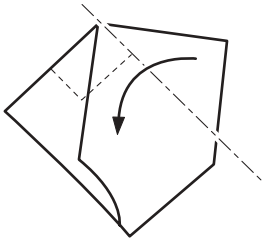

10. Fold the curtain from the center.

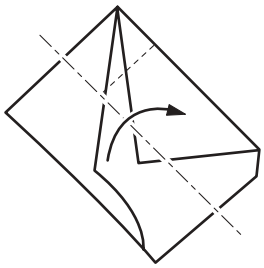

11. Further fold the curtain from the center in two.

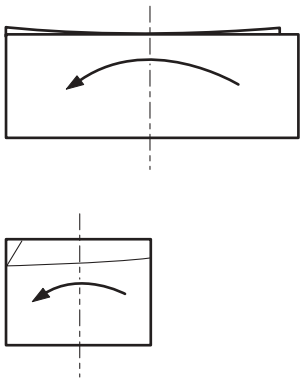

© 2002 American Honda Motor Co., Inc - All Rights Reserved.

12. Turn the curtain inside out. While holding the corner of the storage bag with your fingers, fold back the opening end of the storage bag in the directions shown.

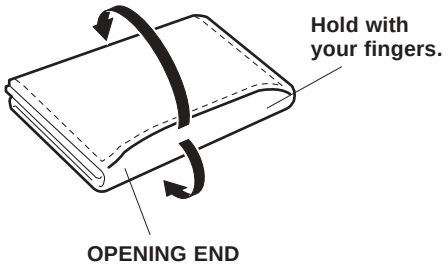

13. The curtain is now stored in the storage bag sewn to the privacy curtain.

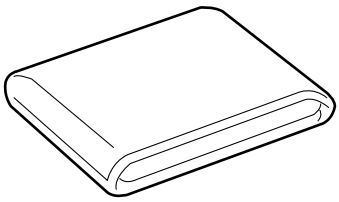

Installing the Rear Privacy Curtain

14. Turn the storage bag inside out and spread the rear privacy curtain with the storage bag facing the inside.
15. Open the anchor covers located on the upper rear panel, and attach the two rear privacy curtain hooks to the anchors.

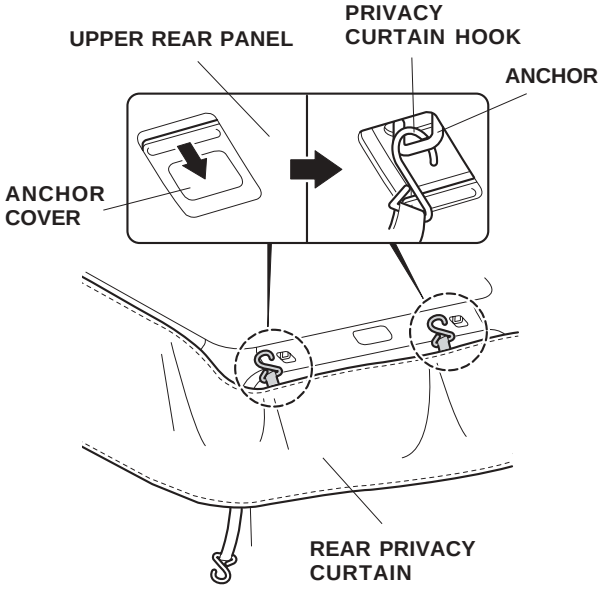

16. Spread the privacy curtain over the right quarter glass, then slide the two tabs into the right quarter pillar trim as shown.

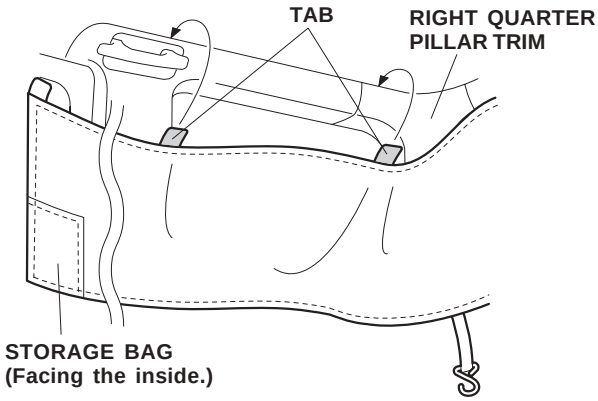

© 2002 American Honda Motor Co., Inc - All Rights Reserved.

17. Slide the remaining tab into the rear door striker cover.

    If you are also installing the front privacy curtain, cross the tabs so that both curtains overlap each other, and secure with the Velcro straps as shown.

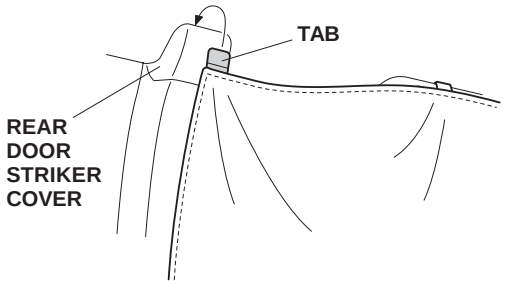

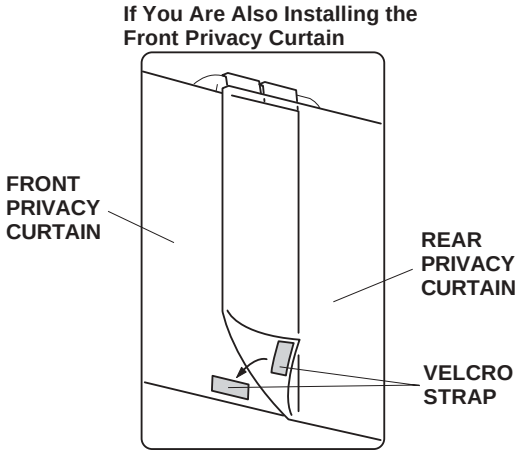

18. Repeat steps 16 and 17 to install the rear privacy curtain on the left side of the vehicle.

19. Engage the two hooks of the rear privacy curtain with the lower tailgate striker.

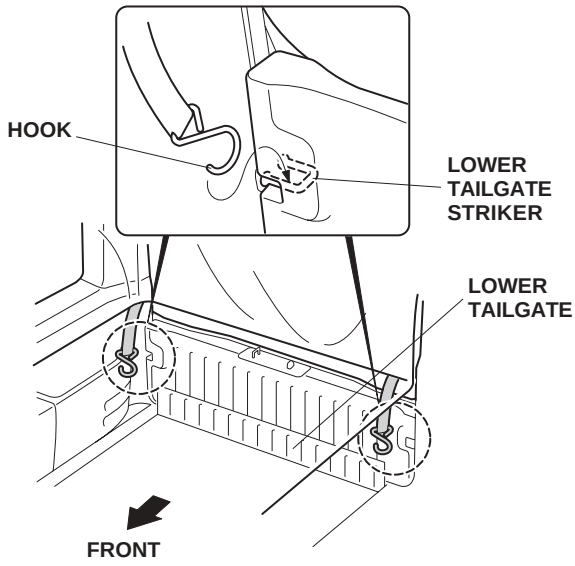

Storing the Rear Privacy Curtain

Fold the curtain and store it in the storage bag sewn to the curtain as described.

20. Spread the curtain with the storage bag facing up, then fold it in two from the center.

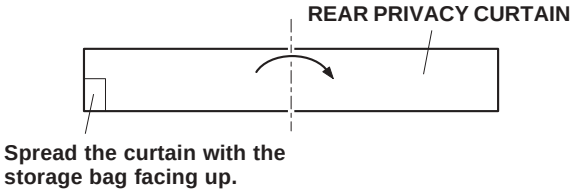

21. Next, fold the curtain in two from the center.

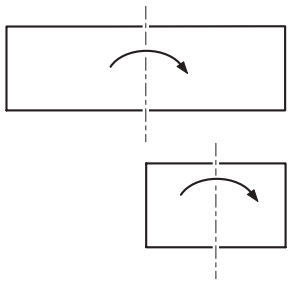

22. Turn the curtain inside out, then fold back the top sheet as described.

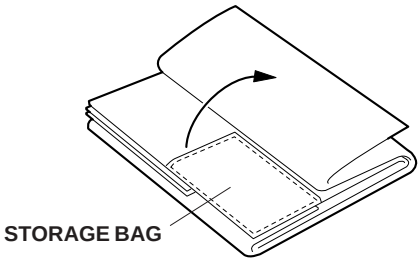

23. Next, fold the curtain from the center.

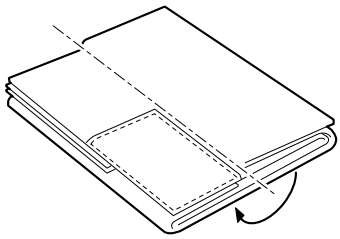

© 2002 American Honda Motor Co., Inc - All Rights Reserved.

24. Fold the curtain in two from the center once again.

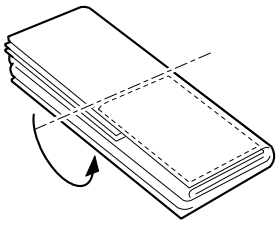

25. While holding the corner of the storage bag with your finger, fold back the opening end of the storage bag in the directions shown.

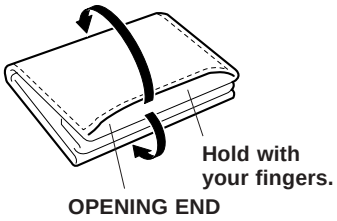

26. The rear privacy curtain is now stored in the storage bag.

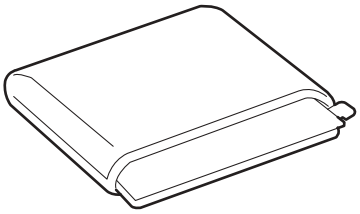

© 2002 American Honda Motor Co., Inc - All Rights Reserved.