www.HandA-Accessories.com

HONDA

INSTALLATION INSTRUCTIONS

Accessory	Application	Publications No.
TAILGATE SEAT BACK P/N 08R32-SCV-100	ELEMENT	All 24296
		Issue Date DEC 2002

Keep this information in the glove box for future reference.

PARTS LIST

Tailgate seat back

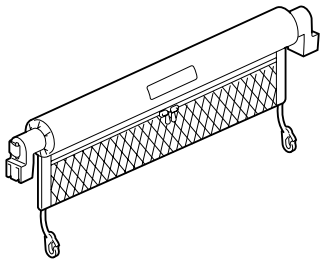

INSTALLATION

NOTE: To avoid damaging the vehicle or the tailgate seat back do not sit on or climb over the tailgate seat back. Before closing the tailgate, remove the tailgate seat back end caps from the seat back strikers.

Backrest Position

1. Open the hatch and the tailgate. Engage the grooves of the tailgate cushion end caps with the left and right strikers. Make sure the label on the tailgate seat back faces the rear. If the belts have not been fastened, fasten them.

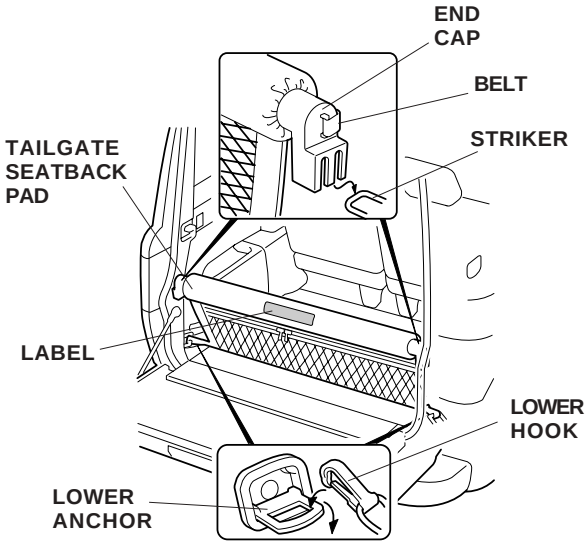

2. Attach the tailgate seat back pad lower hooks to the left and right lower anchors on the vehicle.

Storage Position

1. Unsnap the belts, and take the end caps off the left and right strikers. Hook the belt rings to the left and right cargo net hooks.

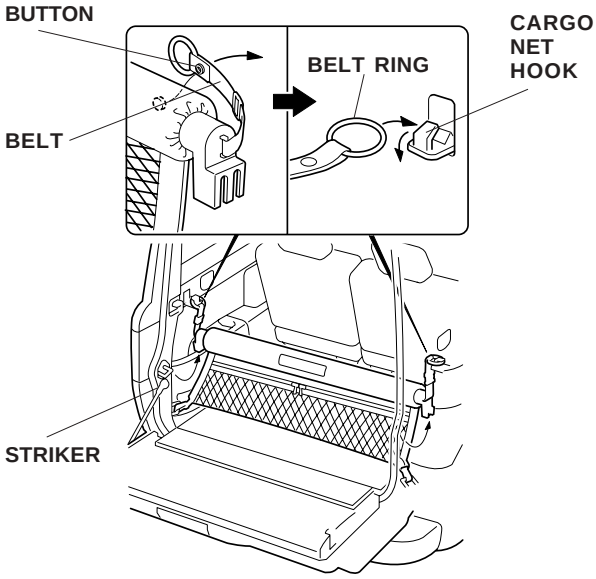

INFORMATION

- Do not place objects that weight more than 6.6 lbs (3 kg) on or against the tailgate seat back.
- Do not store large or fragile objects in the net.
- Do not store objects with sharp edges or corners, as they may damage the tailgate seat back or the vehicle. Wrap such objects in paper or a blanket so they will not contact the net directly.
- Do not lean against the tailgate seat back when items are stored in it.

© 2002 American Honda Motor Co., Inc - All Rights Reserved.