HandA-Accessories.com

HONDA

INSTALLATION INSTRUCTIONS

Accessory	Application	Publications No.
CD/CASSETTE PLAYER	CIVIC 2/3/4-DOOR	All 18761
		Issue Date SEP 1997

PARTS LIST

CD Player:
P/N 08A06-361-210

– or –

Cassette Player:
P/N 08A57-S01-100

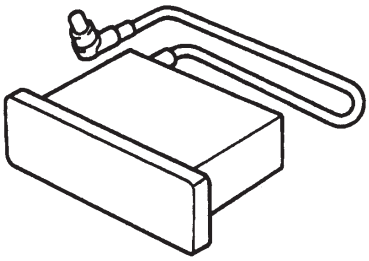

4 Washer-screws

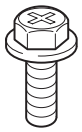

Owner's Manual

Wire tie

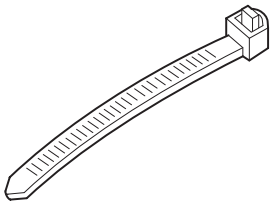

TOOLS REQUIRED

#2 Phillips screwdriver

10 mm Socket

Ratchet

INSTALLATION

NOTE: on the CX model, a genuine Honda radio (P/N 08A52-S01-100) is required to operate the CD/cassette player. The radio is sold separately.

1. Write down the customer's radio station presets. The radio memory will be erased when you disconnect the battery.
2. Disconnect the negative cable from the battery.
3. Remove the driver's dashboard lower cover (three self-tapping screws, three clips, and pull), then disconnect the connector(s).

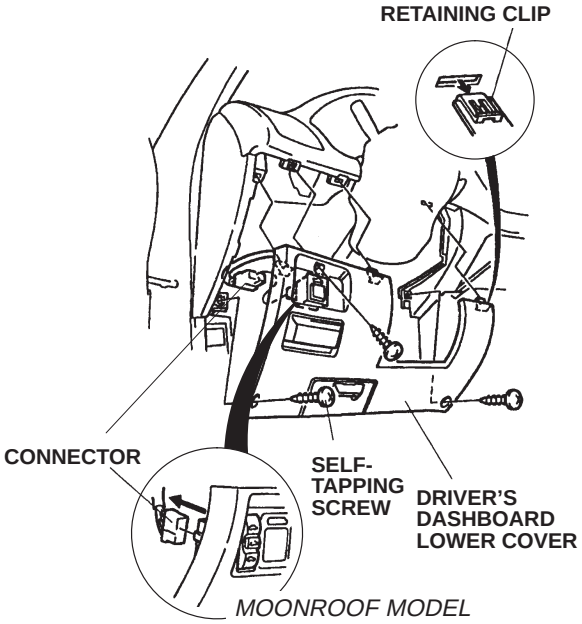

4. Remove the glove box (two bolts).

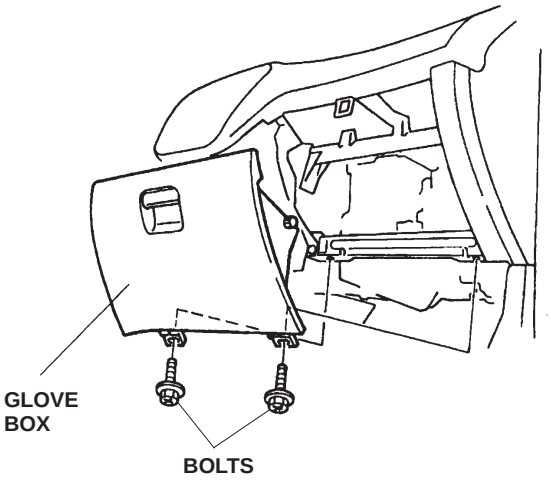

© 1997 American Honda Motor Co., Inc. – All Rights Reserved

5. Remove the rear console.
   - *Without a front armrest:* Remove the two self-tapping screws, and release the two retaining tabs.

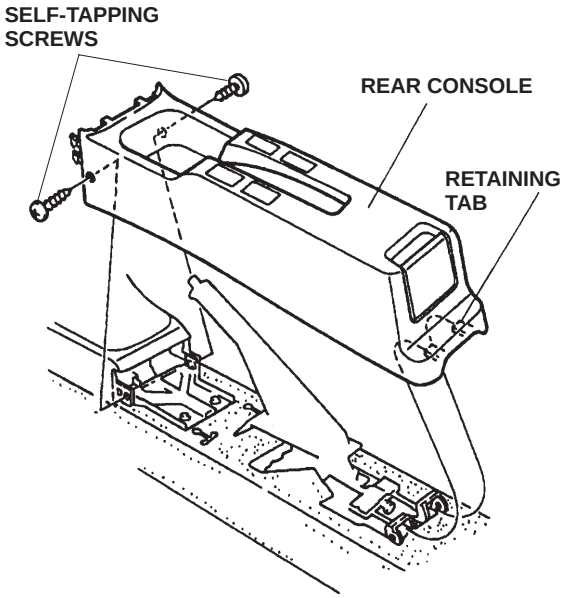

   - *With a front armrest:* Remove the four self-tapping screws.

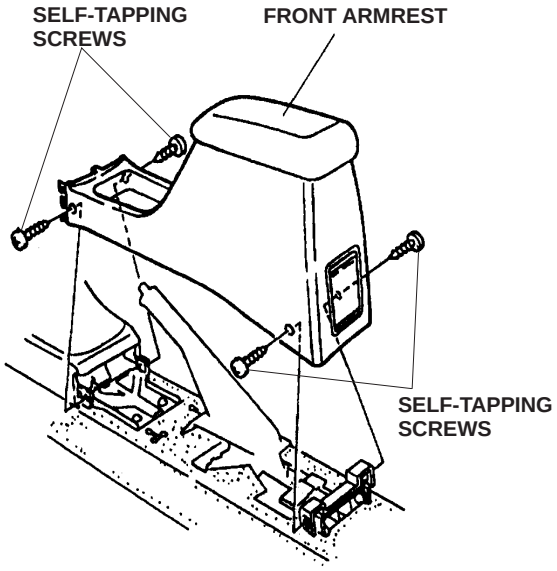

6. Remove the front console (four self-tapping screws).

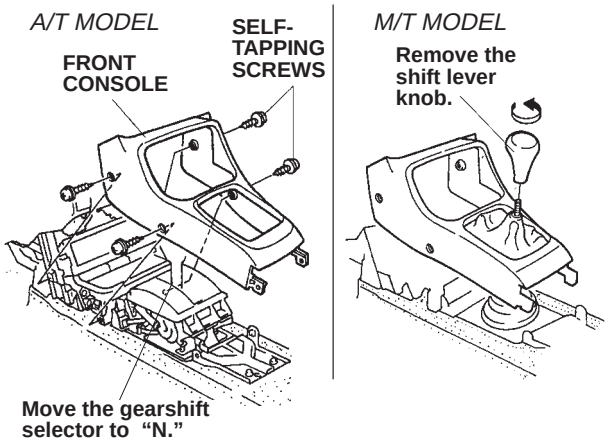

7. Remove the console panel (four self-tapping screws).

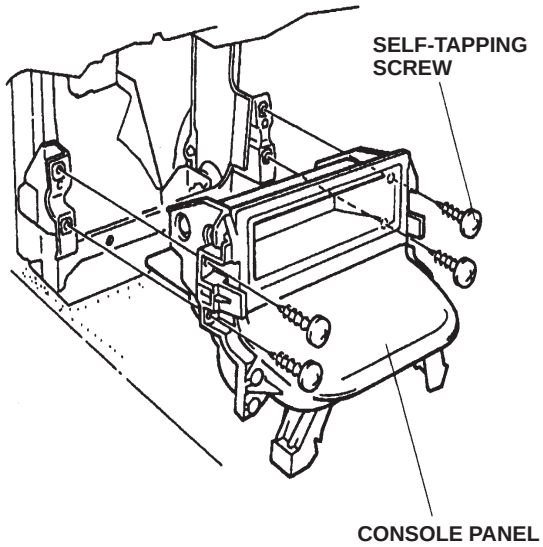

8. Remove the center dashboard lower cover (five self-tapping screws, one bolt, and one connector).

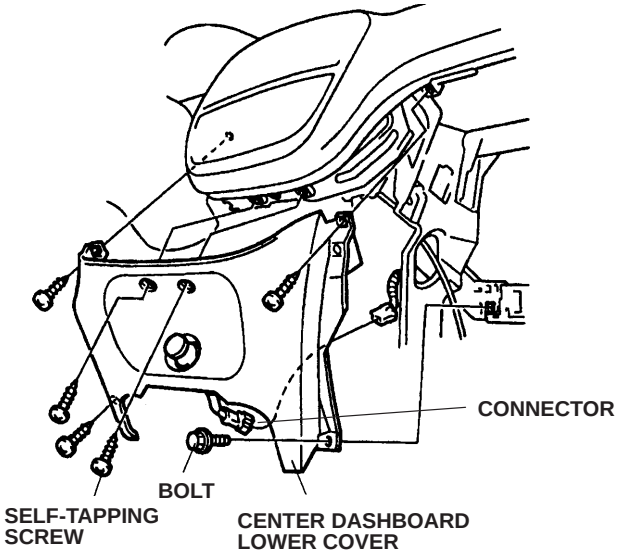

© 1997 American Honda Motor Co., Inc. – All Rights Reserved

9. Loosen the two screws securing the radio, then pull the radio out toward you. Unplug the antenna lead and the 16-pin connector (gray) from the rear of the radio. If equipped with keyless entry and/or a security system, unplug the green connector(s) from the rear of the radio.

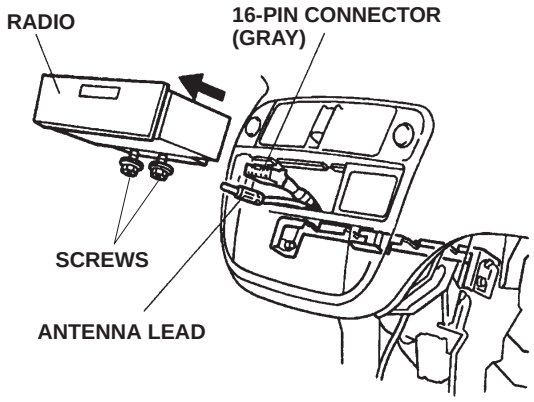

10. Remove the pocket from the console panel (two self-tapping screws).

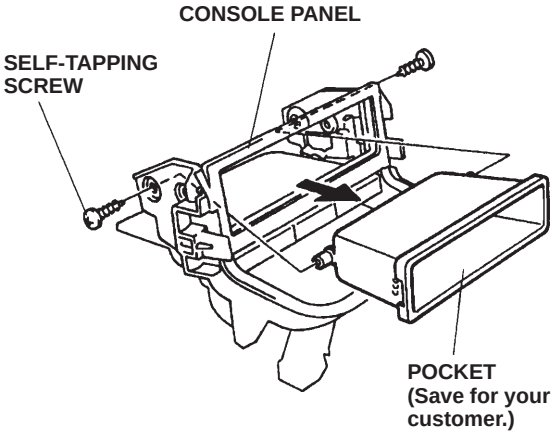

11. Slide the CD/cassette player into the console panel, and install the four washer-screws.

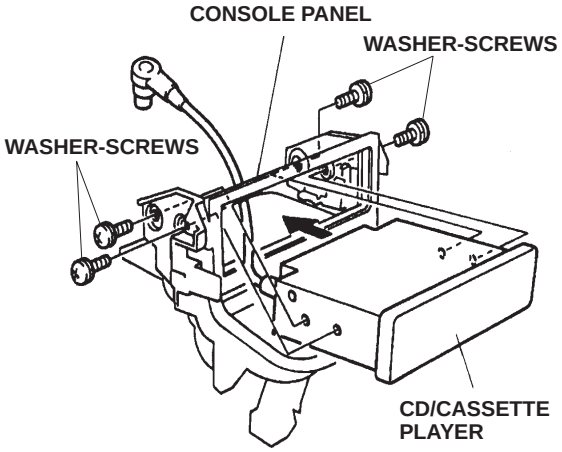

12. Route the 8-pin DIN connector from the CD/cassette player up and out through the radio opening.

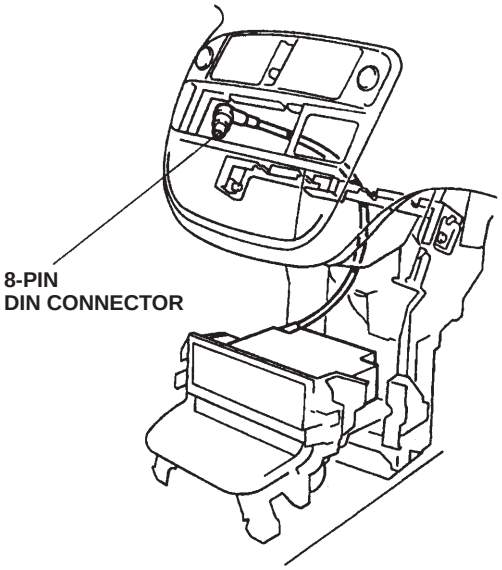

13. Install the radio:
    - Plug the 8-pin DIN connector, the 16-pin connector (gray), and the antenna lead into the rear of the radio.
    - If equipped with keyless entry and/or a security system, plug the green connector(s) into the rear of the radio.
    - Carefully slide the radio back into the dash, and install the two screws.

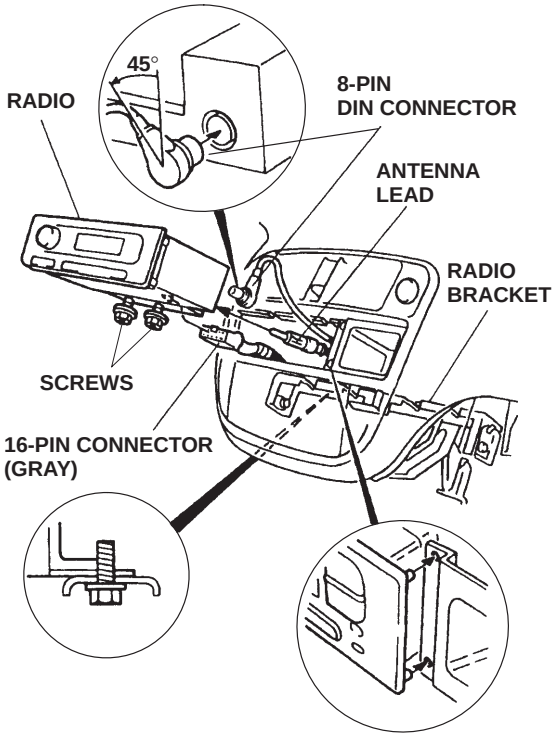

© 1997 American Honda Motor Co., Inc. – All Rights Reserved

14. Secure the DIN cable to the vehicle harness with the wire tie. Secure the wire tie only in the area shown and not to the yellow SRS wire harness.

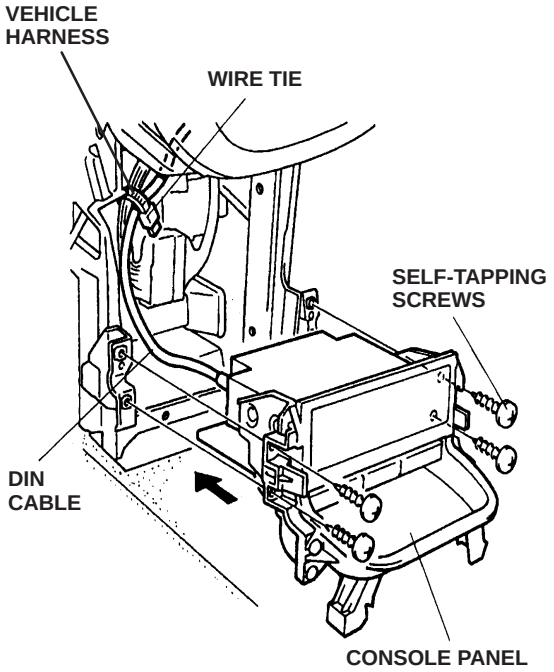

15. Reinstall the console panel to the front console with the four self-tapping screws you removed in step 7.
16. Reconnect the negative cable to the battery.
17. Check the operation of the CD/cassette player as described in the Owner's Manual supplied with the player.
18. Reinstall the glove box, the center dashboard lower cover, the rear console, and the driver's lower dashboard cover.
19. Reset the clock and the radio station presets.
20. Put the CD/cassette player Owner's Manual in the glove box for future reference.
21. Put the pocket (removed in step 10) in the vehicle for your customer.

AII 18761 (9709)
© 1997 American Honda Motor Co., Inc. – All Rights Reserved