www.HandA-Accessories.com

HONDA

INSTALLATION INSTRUCTIONS

Accessory	Application	Publications No.
CD CHANGER	ELEMENT	AII 24282
		Issue Date DEC 2002

PARTS LIST

CD Changer Attachment Kit:
P/N 08B26-SCV-100

CD changer plate

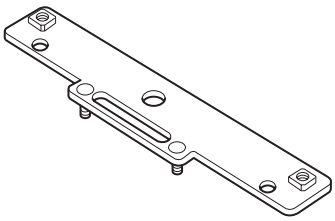

Right base bracket

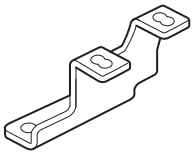

Left base bracket

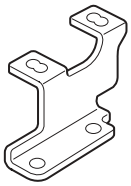

Right side bracket

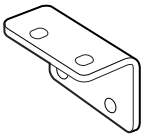

Left side bracket

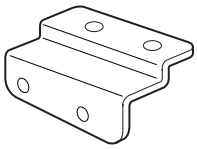

BUS cable

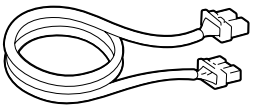

Harness clamp bracket

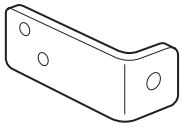

Connector clip

2 Screw-grommets

2 Self-tapping screws

7 Washer-screws, 4 x 8 mm

6 Flange nuts, 6 mm

2 Washer-bolts, 6 x 12 mm

10 Wire ties

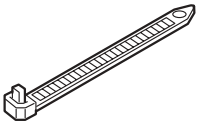

6 EPT Sealer

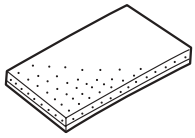

6 Cushion tapes

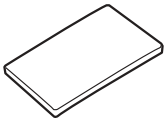

2 Harness clip

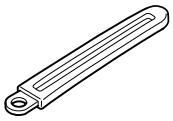

2 Wire ties with clip

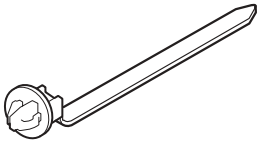

User information

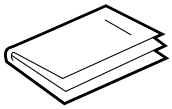

© 2002 American Honda Motor Co., Inc - All Rights Reserved.

CD Changer:
P/N 08A26-5E1-100

CD Changer

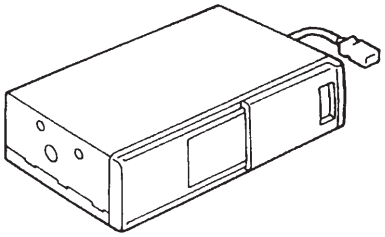

CD Magazine

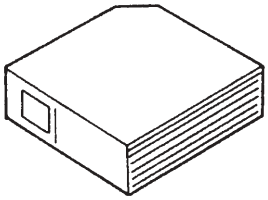

8 Washer-screws, 4 x 6 mm
(Not used)

Owner's Manual

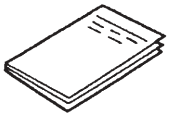

Side Bracket
(Not used)

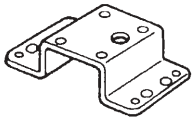

TOOLS AND SUPPLIES REQUIRED

Phillips screwdriver
Flat-tip screwdriver
Precision flat-tip screwdriver
Stubby Phillips screwdriver
8 mm, 10 mm and 14 mm Combination wrenches
8 mm, 10 mm and 14 mm Sockets
Ratchet
Torque wrench
Clip remover
Diagonal cutters
Isopropyl alcohol
Shop towel
Tape measure

Illustration of CD Changer Installed on the Vehicle

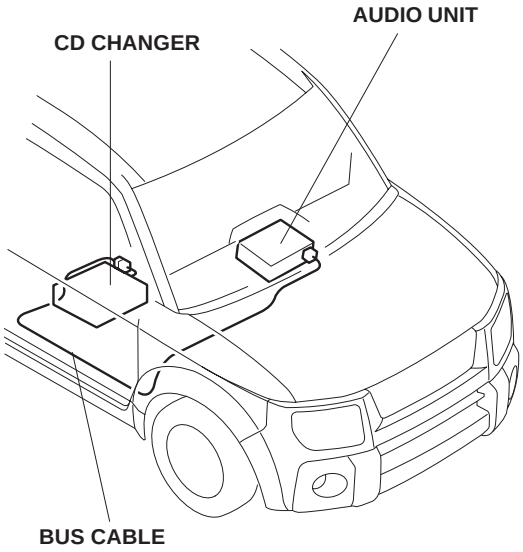

© 2002 American Honda Motor Co., Inc - All Rights Reserved.

INSTALLATION

Customer Information: The information in this installation instruction is intended for use only by skilled technicians who have the proper tools, equipment, and training to correctly and safely add equipment to your vehicle. These procedures should not be attempted by “do-it-yourselfers.”

1. Make sure you have the anti-theft code for the radio, then write down the frequencies for the preset buttons.
2. Disconnect the negative cable from the battery.
3. Wrap the shop towel to the top of the flat-tip screwdriver, and insert it to grooves in the audio panel. Pull the audio panel out toward you to release the five clips and remove the audio panel. Take care not to damage the clips.

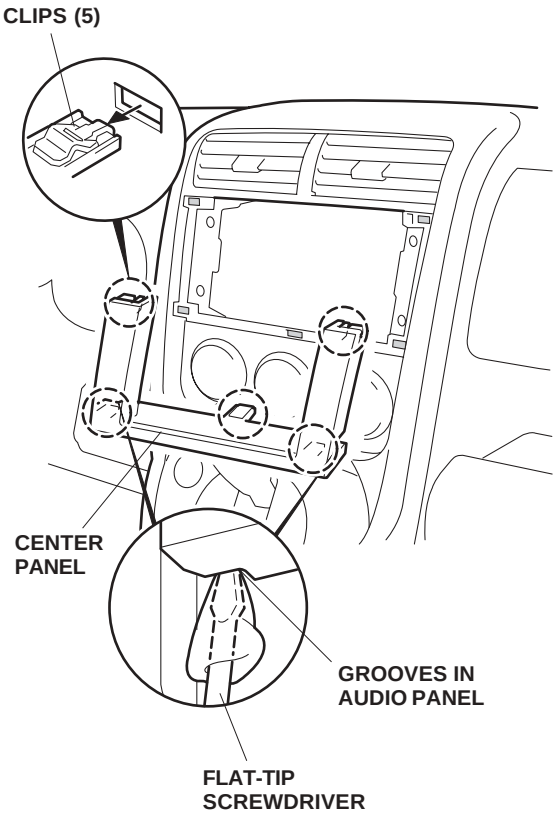

4. Remove the four self-tapping screws and pull out the audio unit.
5. Disconnect the vehicle connector (three connectors on EX model) and the antenna lead, then remove the audio unit.

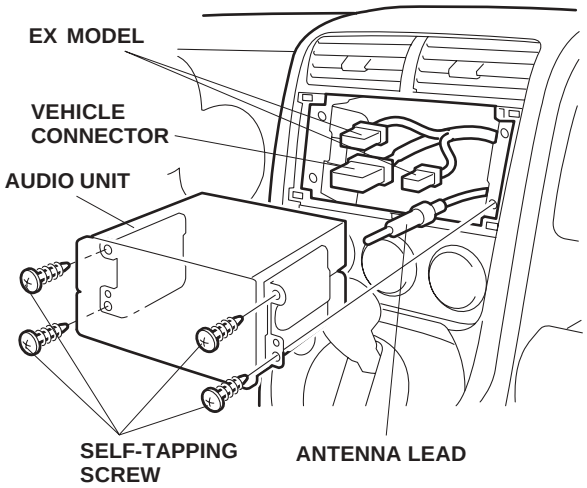

6. Remove the passenger’s lower dashboard cover (disengage the three clips, and disconnect the two pins).

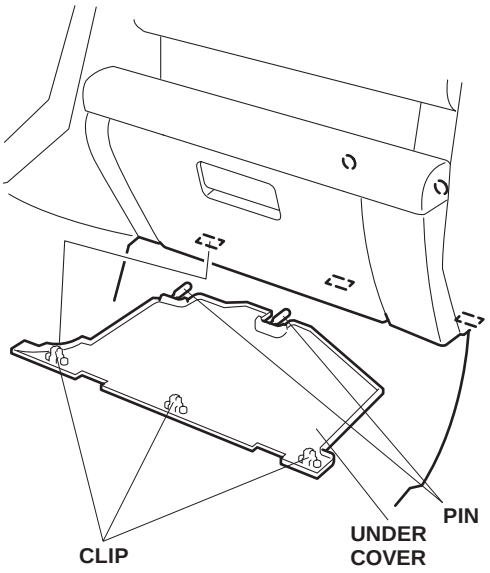

© 2002 American Honda Motor Co., Inc - All Rights Reserved.

7. Open the glove box and remove the two stoppers by releasing the two retaining tabs for each stopper. Remove the two screws that fasten the glove box, and remove the glove box.

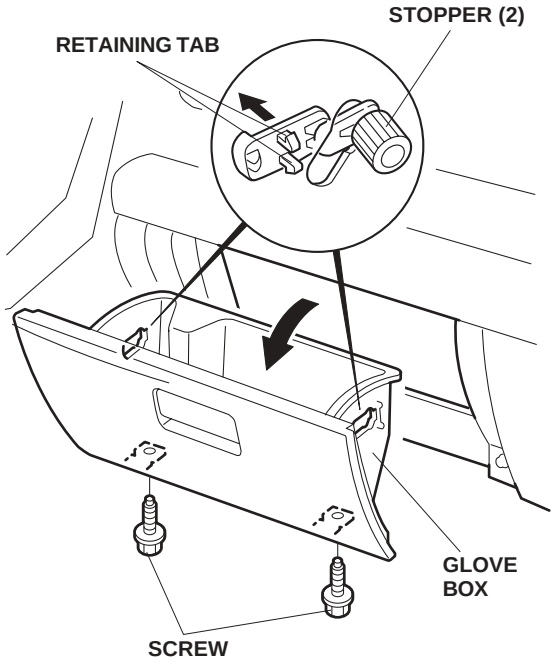

8. Remove the knob from the recline lever. Remove the two clips and remove the right recline cover from the passenger's seat.

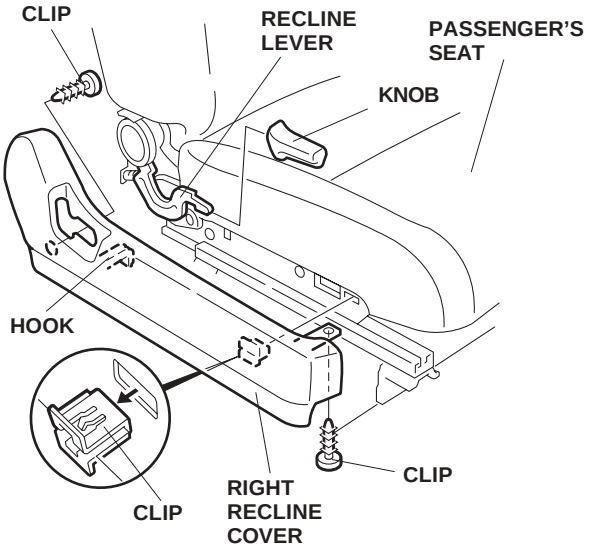

9. Remove the left recline cover from the passenger's seat (self-tapping screw and two clips).

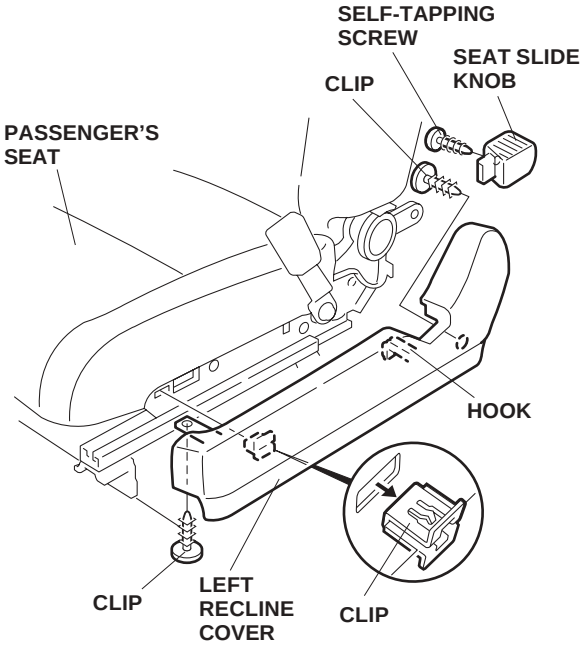

10. Behind the passenger's seat, remove the clips that fasten the rear cover to the vehicle panel and remove the cover. Take care not to damage the clips.

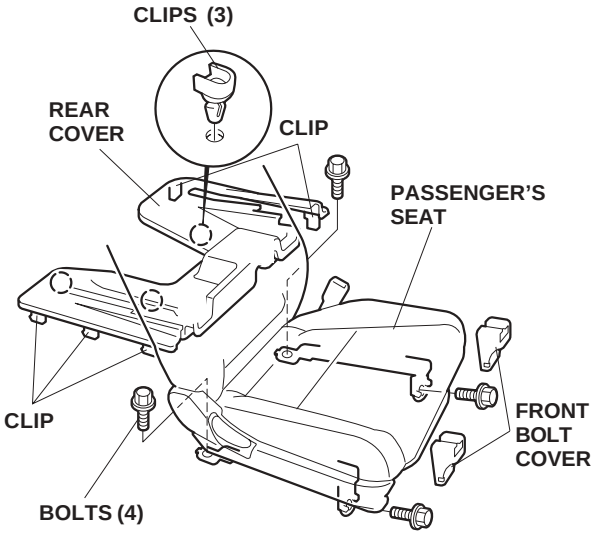

11. Remove the two front bolt covers, then remove the four bolts that fasten the passenger's seat side rails so that the passenger's seat can be lifted.

© 2002 American Honda Motor Co., Inc - All Rights Reserved.

12. Remove the passenger's sill trim (ten clips and two retaining tabs). Take care not to damage the clips and retaining tabs.

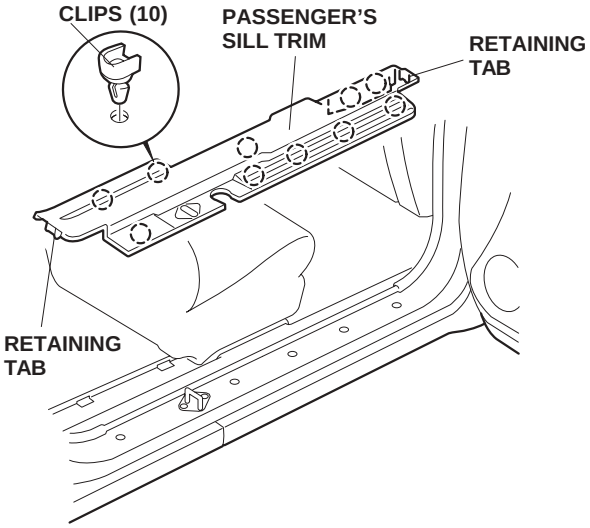

13. Pull up the door opening trim, and remove the passenger's kick panel (pull the kick panel out toward you to release the two clips and two hooks). Take care not to damage the clips and hooks.

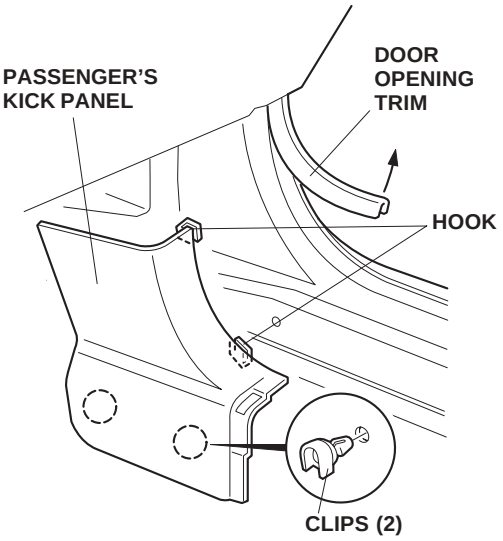

Routing the BUS Cable

14. From the center dashboard opening, route the BUS cable toward the glove box opening along the antenna lead.

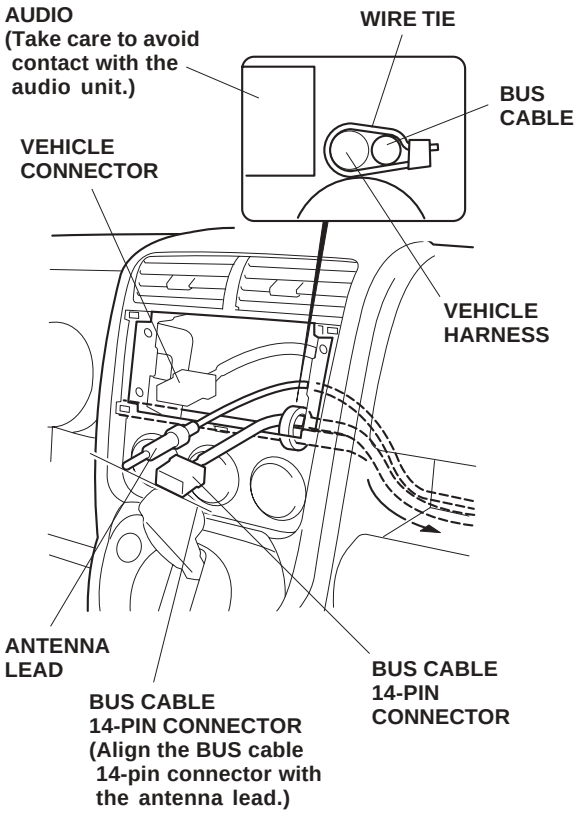

15. Pull the BUS cable 14-pin connector out from the center dashboard opening and adjust the cable so that the distance from the center dashboard opening to the end of the 14-pin connector is 100 mm. Secure the BUS cable to the vehicle harness with one wire tie as shown.

© 2002 American Honda Motor Co., Inc - All Rights Reserved.

16. Continue routing the BUS cable along the dashboard frame, and secure it to the antenna lead with the four wire ties in the areas shown. Point the connection part of the two wire ties upward as shown.

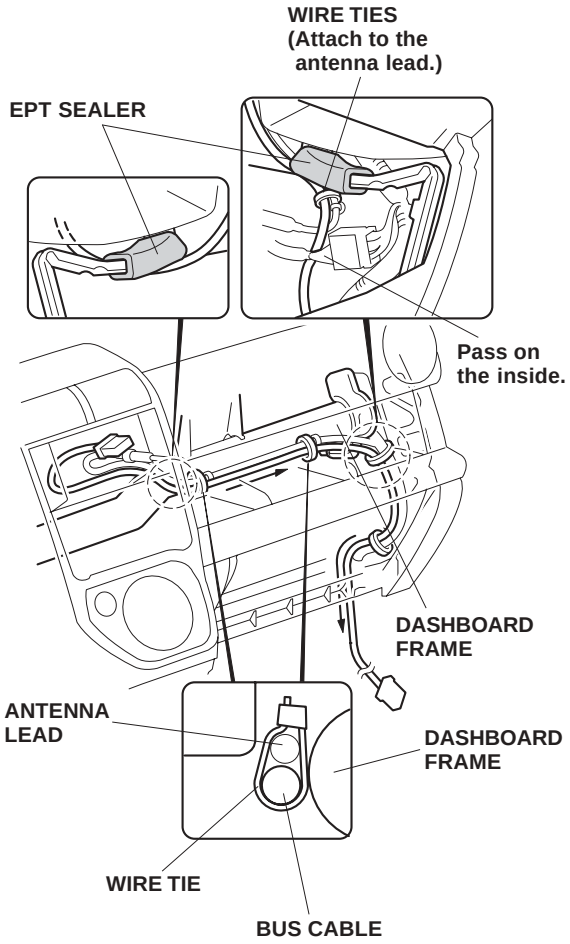

17. Continue routing the BUS cable downward and attach it with wire ties or cushion tape.

With Amplifier:

Secure the BUS cable to the amplifier harness with the wire ties in the areas shown.

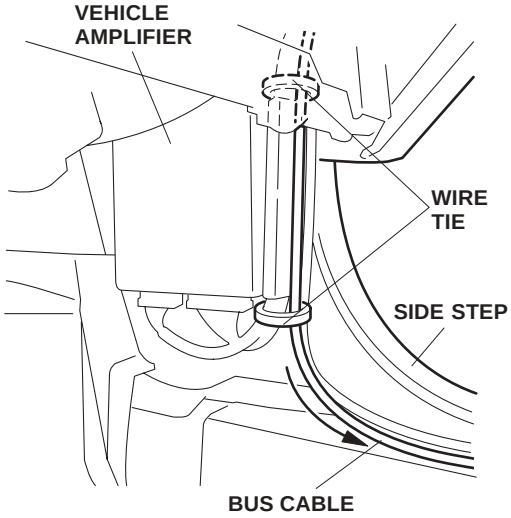

Without Amplifier:

Using isopropyl alcohol, thoroughly clean the vehicle panel in the area shown, then secure the BUS cable to the vehicle panel with the two cushion tapes.

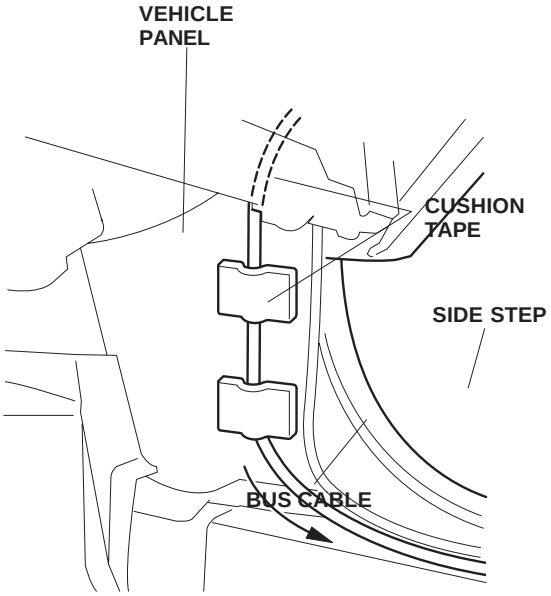

© 2002 American Honda Motor Co., Inc - All Rights Reserved.

18. Route the BUS cable toward the rear of the vehicle along the side step and under the floor covering to the passenger's seat, then out through the hole in the floor covering.

    - Route the BUS cable as shown.

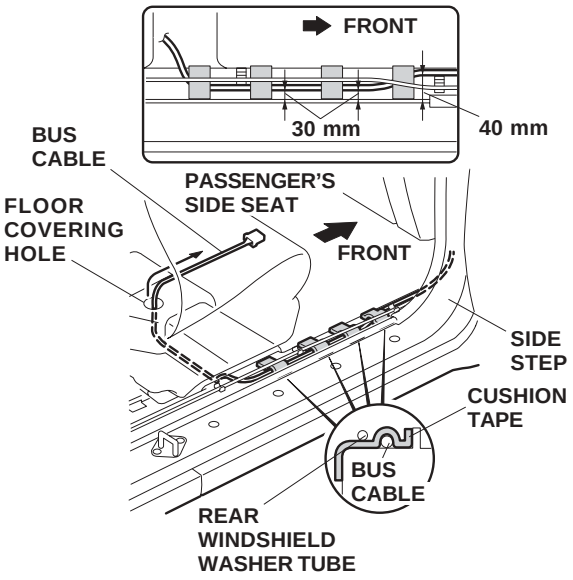

19. Using isopropyl alcohol, thoroughly clean the area where the four cushion tapes will be attached. Secure the BUS cable to the vehicle panel with the cushion tapes.

20. Adjust the BUS cable so that the distance from the end of the 14-pin connector to the hole in the floor covering is 330 mm.

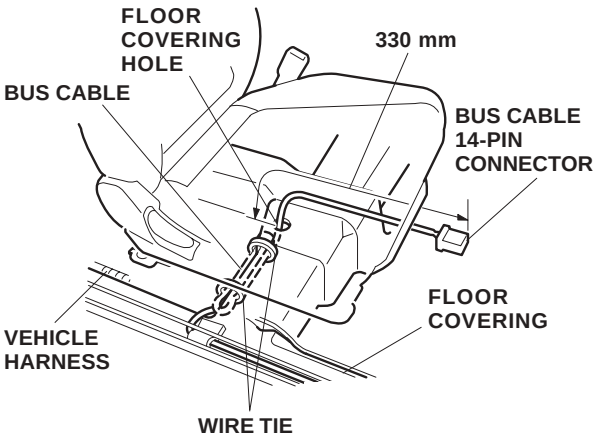

21. Turn over the floor covering. Make loops in the BUS cable, then secure the loops to the vehicle harness with the two wire ties in the areas shown.

Installing the CD Changer

22. Visually check the location of the spring adjusting knobs on both sides of the CD changer. The spring adjusting knob should be in the horizontal position (H). If the knobs are in the vertical position (V), adjust them to the horizontal position.

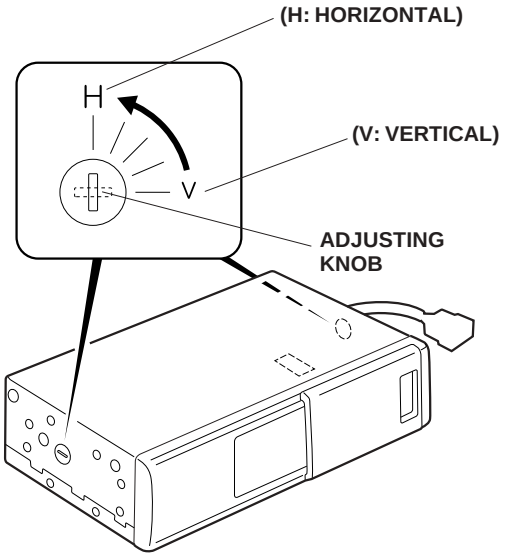

23. Position the harness clamp bracket on the CD changer and install the 4 x 8 mm washer-screw.

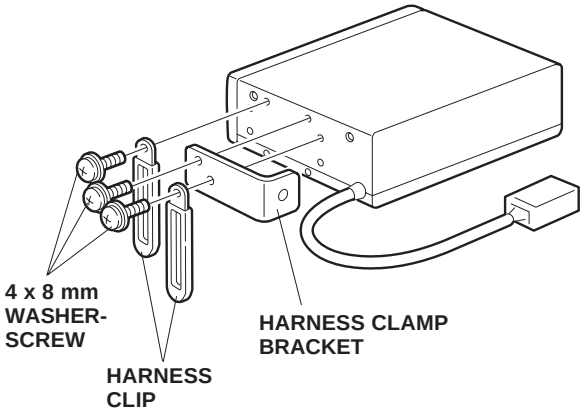

24. Attach the two harness clips to the CD changer and the harness clamp bracket you just installed using the two 4 x 8 mm washer-screws.

© 2002 American Honda Motor Co., Inc - All Rights Reserved.

25. Wrap one EPT sealer around the BUS cable connector from the CD changer, then secure the BUS cable and connector to the CD changer with the harness clips you just installed.

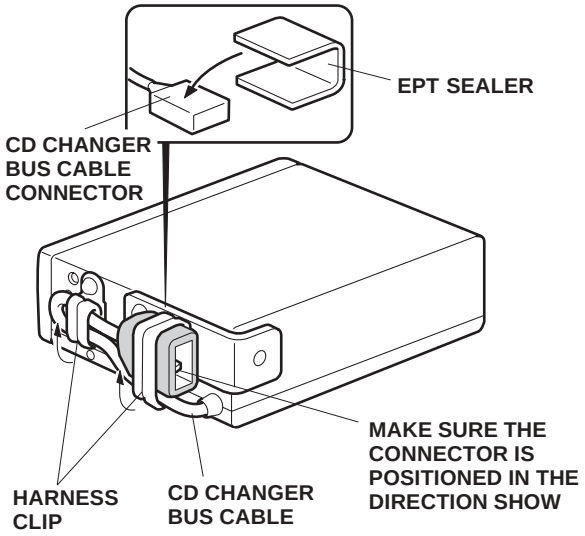

26. Position the CD changer brackets on the sides of the CD changer, then install the four 4 x 8 mm washer-screws and tighten securely.

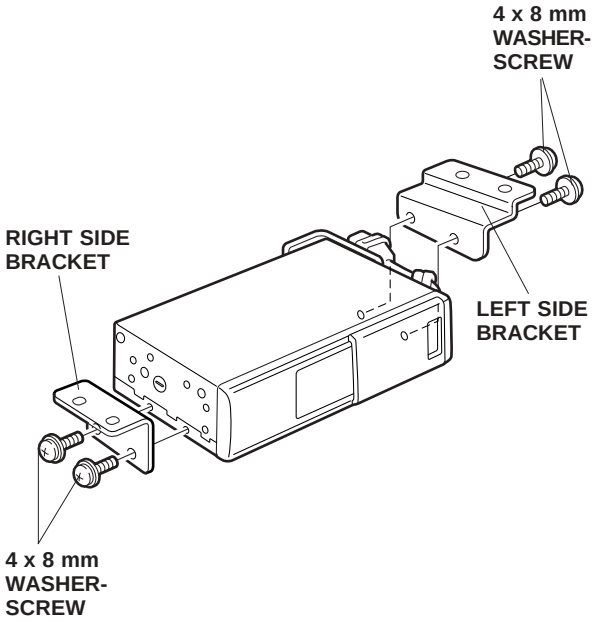

27. Release the passenger's seat cushion (nine hooks). Lift the the seat cushion.

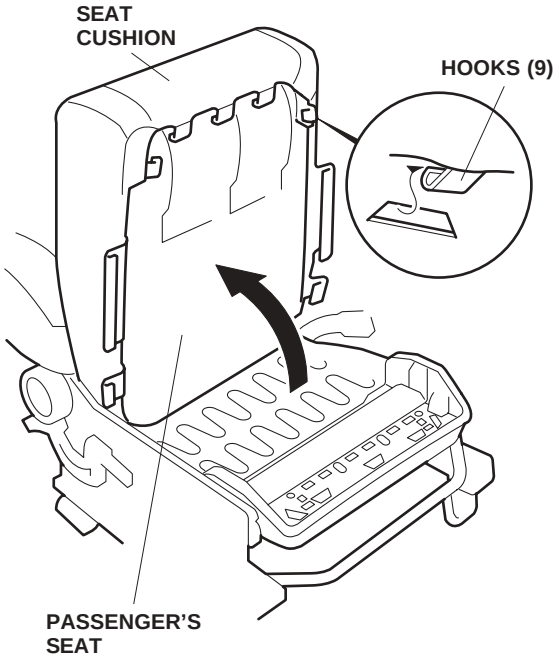

© 2002 American Honda Motor Co., Inc - All Rights Reserved.

28. Remove the clip that secures the vehicle harness connector to the seat panel.

ï Relocate the connector on the seat panel in the area shown.

ï Slide the clip of the vehicle connector (gray) off the seat panel by pushing it with a small flat-tip screwdriver, then install the connector clip from the kit on the vehicle connector (gray) in the new direction.

ï Relocate the vehicle connector (gray) to the seat panel in the new area shown.

Without side Air Bag:

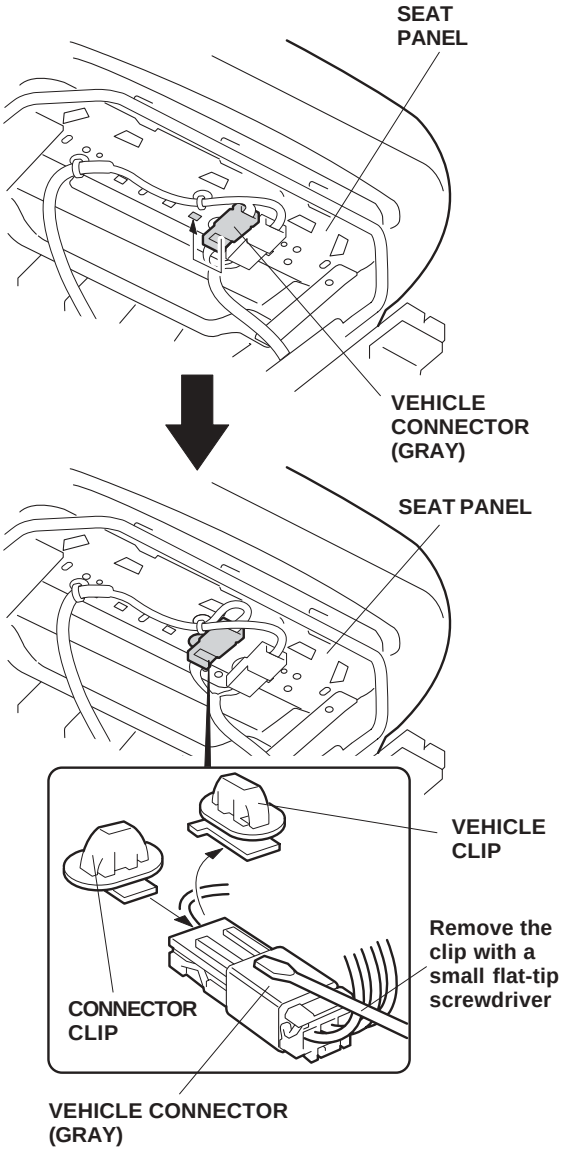

With side Air Bag:

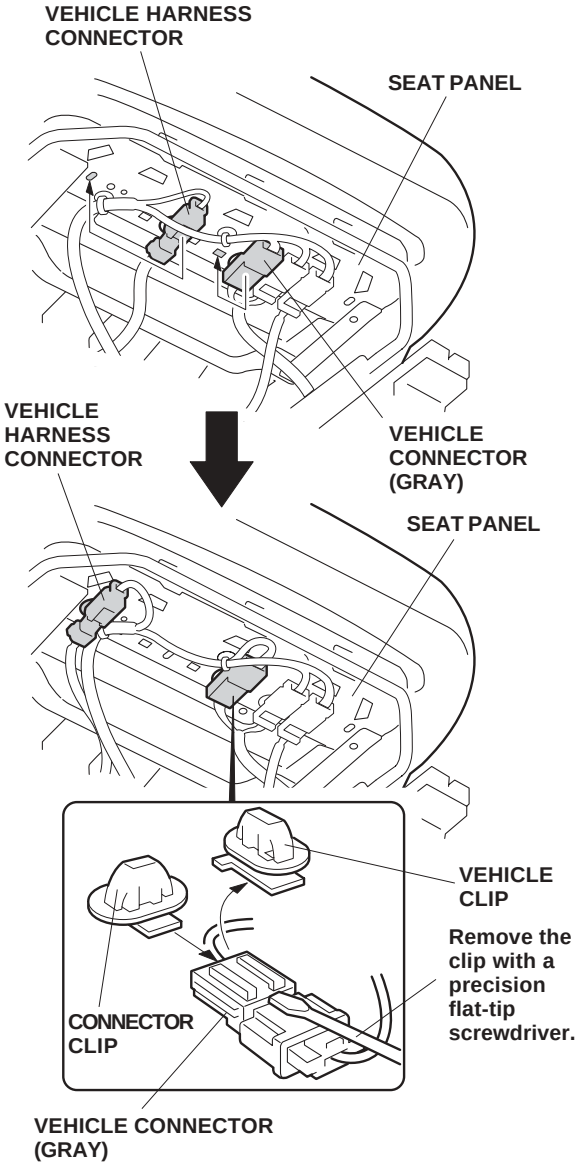

© 2002 American Honda Motor Co., Inc - All Rights Reserved.

29. Cut two EPT sealers to 70 mm and 90 mm as shown.

30. Remove the harness clip shown in the figure from the seat panel. Wrap the cut EPT sealers around the vehicle harness. Then reinstall the harness clip in its original position.

    - Please keep the cut EPT sealer, it will be reused.

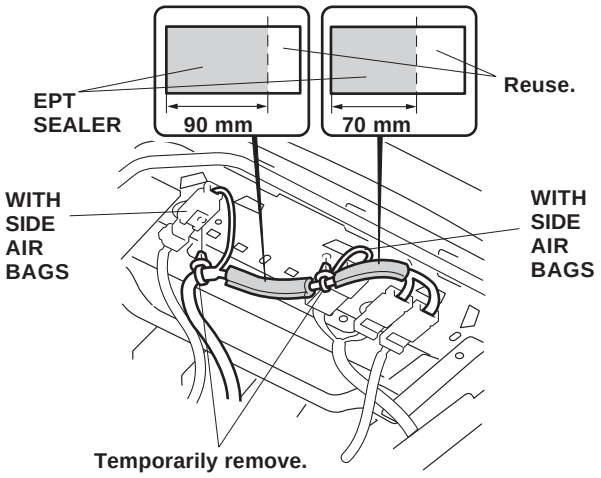

31. Insert the studs from the CD changer plate into the elongated holes in the seat panel.

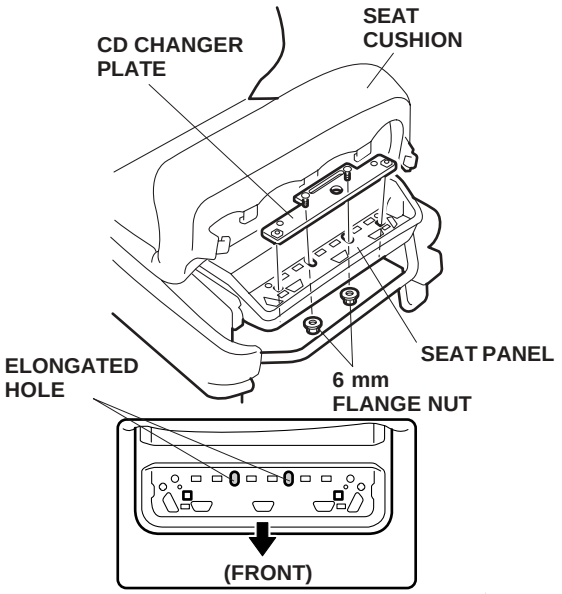

Viewed with seat upside down

32. Tighten the two 6 mm flange nuts.

    - Take care not to injure your hands with the burrs and sharp edges of the inside of the seat panel.

33. Prepare the seat base.

ï Use the excess EPT sealer from the 70 mm cut and wrap it around the right base bracket.

ï Attach the right and left base brackets to the seat panel with the two 5 x 26 mm self-tapping screws and two 6 x 12 mm washer-bolts.

ï Insert the two self-tapping screws into the holes in the screw grommets, and 6 x 12 mm washer-bolts into the nuts welded on the CD changer plate.

ï Push the two screw grommets into the rear square holes of the seat panel from the bottom side.

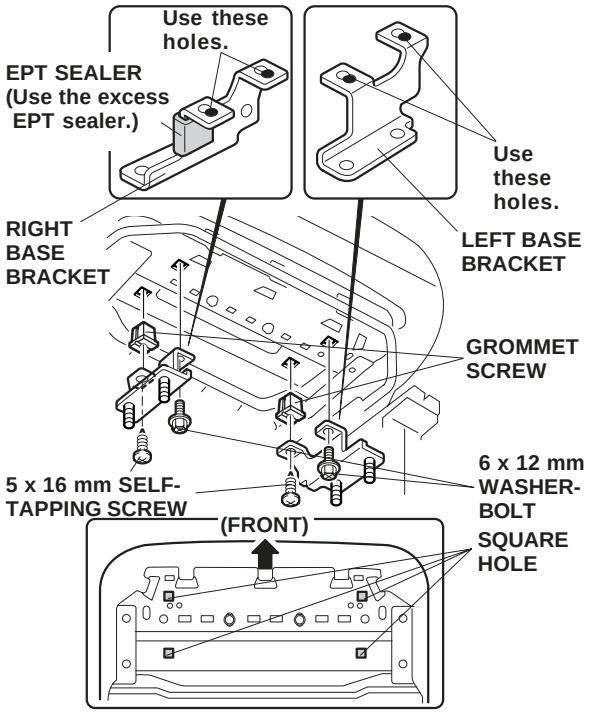

Viewed with seat upside down

34. Install one wire tie with clip to the right base bracket and attach the vehicle harness.

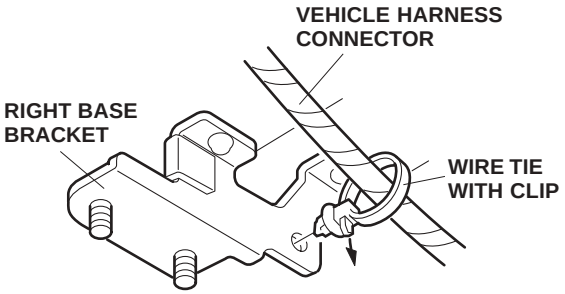

© 2002 American Honda Motor Co., Inc - All Rights Reserved.

35. Attach the excess EPT sealer from the 90 mm cut to the harness clamp bracket.

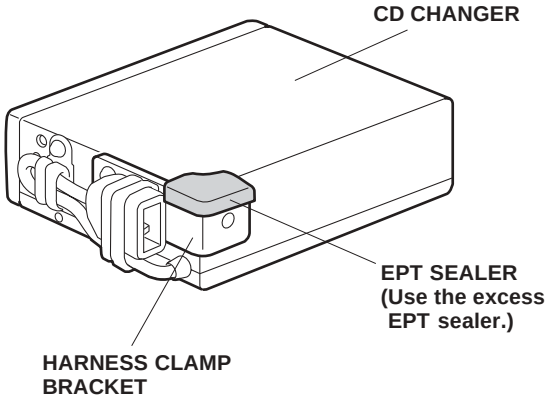

36. Position the CD changer on the right and left brackets then install the four 6 mm flange nuts and tighten securely.

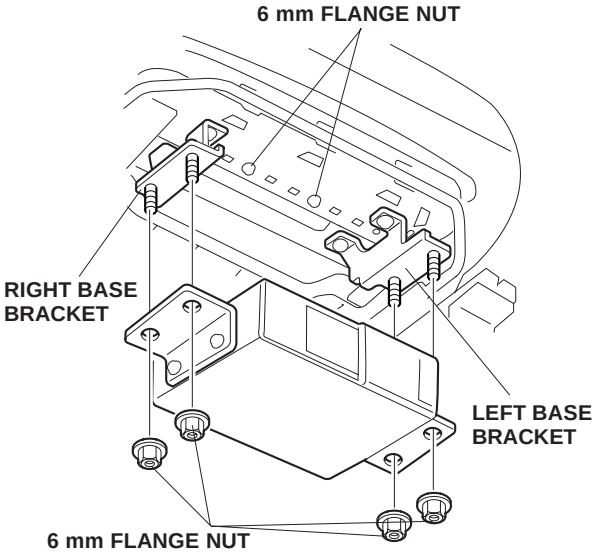

37. Plug the BUS cable connector into the CD changer, and secure the BUS cable to the harness clamp bracket with one wire tie with clip in the area shown.

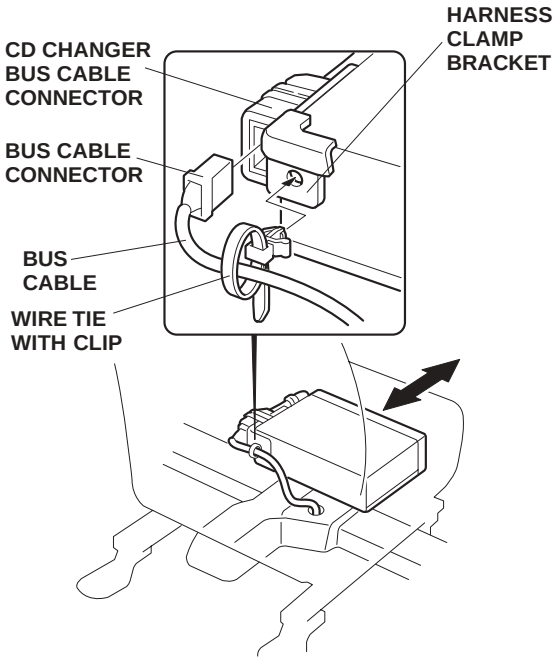

38. Temporarily tighten the four seat mounting bolts. Slide the seat back and forth to check that the BUS cable is not pulled too tight and does bind.

© 2002 American Honda Motor Co., Inc - All Rights Reserved.

39. Attach the vehicle harness to BUS cable with one wire tie.

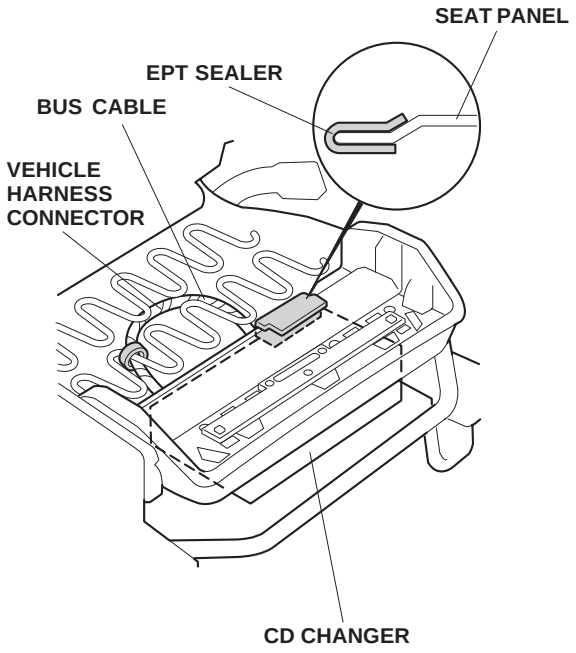

40. Attach the EPT sealer at the location where the BUS harness and the seat panel may interfere with each other.

41. Torque the seat mounting bolts to 31-37 N·m (23- 27 lb-ft).

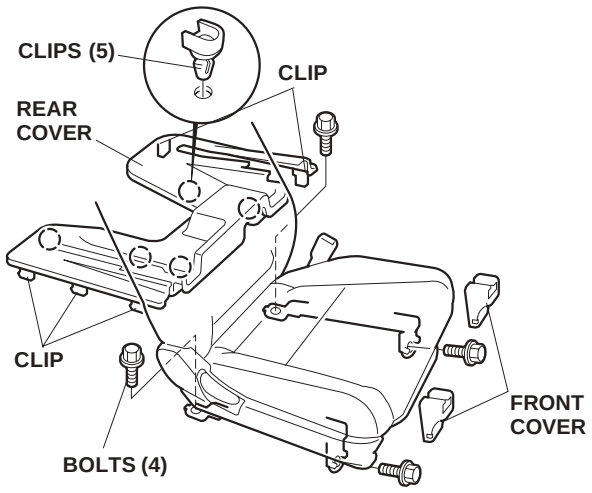

42. Reinstall the bolt covers.

Connecting the BUS Cable and Audio Unit

43. Plug the BUS cable 14-pin connector, the vehicle 20-pin connector, and antenna lead into the back of the AM/FM CD Tuner.

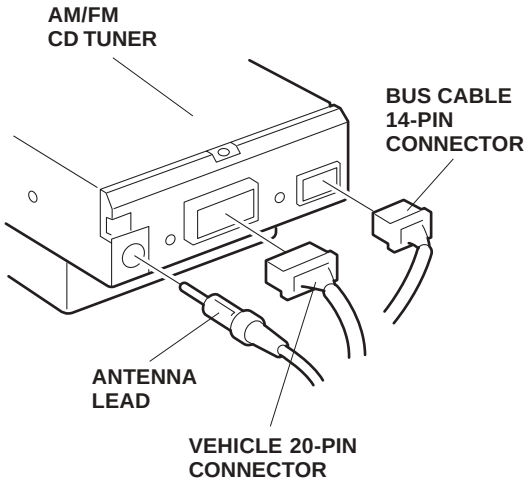

with MP3 player:

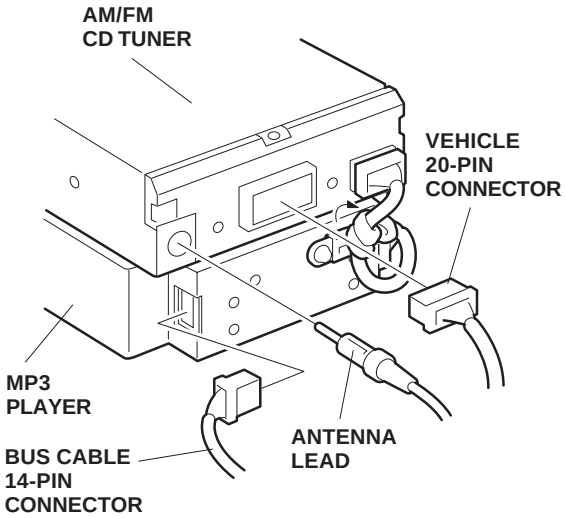

© 2002 American Honda Motor Co., Inc - All Rights Reserved.

with cassette player:

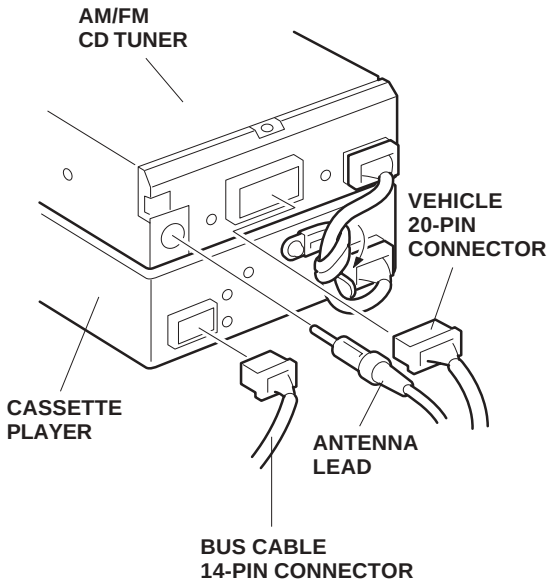

44. Plug the BUS cable 14-pin connector, the vehicle connector, and antenna lead into the back of the audio unit.

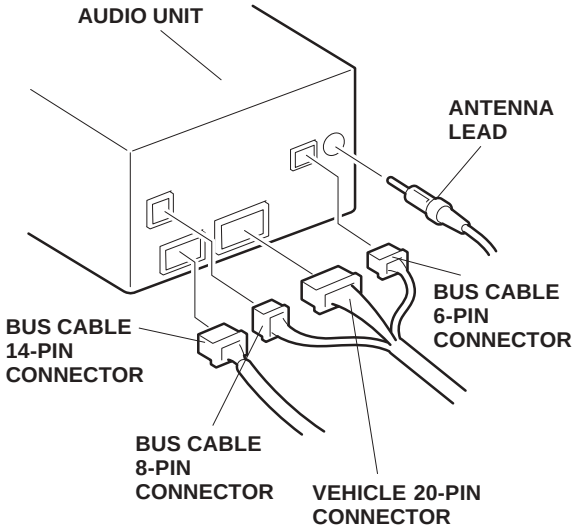

45. Slide the audio unit into the radio opening, and reinstall the four self-tapping screws.

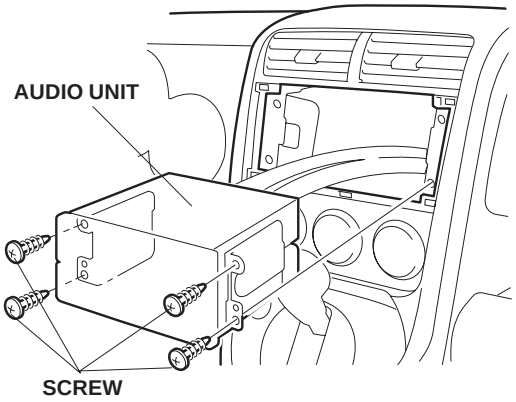

46. Check that all wire harnesses are routed properly and all connectors are plugged in.
47. Reconnect the negative cable to the battery.
48. Check the operation of the CD changer as described in the Owner's Manual supplied.
49. Reinstall all removed parts.
50. Put the CD changer Owner's Manual in the glove box.
51. Enter the customer's radio anti-theft code, and reset the radio station presets.

NOTE: Whenever the battery is disconnected, the driver's window AUTO function is disabled.

52. Start the engine. Push down on the driver's window switch until the window is fully open.
53. Pull up on the driver's window switch to close the window completely, then hold the switch for two seconds.
54. Test the AUTO function.
55. Do the PCM idle learn procedure.
    - Mark sure all electrical items are turned off.
    - Start the engine . Hold the engine speed at 3,000 rpm with no load (in Park or Neutral) until the radiator fan comes on.
    - Let the engine idle for about 5 minutes with the throttle fully closed and with all electrical items off.

      NOTE: If the radiator fan comes on during this step, the time it is operating must not be included the 5 minutes.

© 2002 American Honda Motor Co., Inc - All Rights Reserved.