www.HandA-Accessories.com

HONDA

INSTALLATION INSTRUCTIONS

Accessory	Application	Publications No.
REAR POWER OUTLET P/N 08U55-SCV-100	ELEMENT	AII 24300
		Issue Date DEC 2002

PARTS LIST

Accessory socket

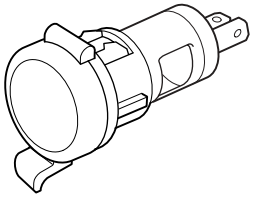

Relay

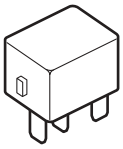

TOOLS AND SUPPLIES REQUIRED

Phillips screwdriver

Flat-tip screwdriver

10 mm Combination wrench

Ratchet

10 mm and 14 mm Sockets

Torque wrench

Clip remover

INSTALLATION

Customer information: The information in this installation instruction is intended for use only by skilled technicians who have the proper tools, equipment, and training to correctly and safely add equipment to your vehicle. These procedures should not be attempted by “do-it-yourselfers.”

1. Make sure you have the anti-theft code for the radio, then write down the frequencies for the preset buttons.
2. Disconnect the negative cable from the battery.
3. Open the upper and lower tailgates and take out the cargo area floor (two hooks).

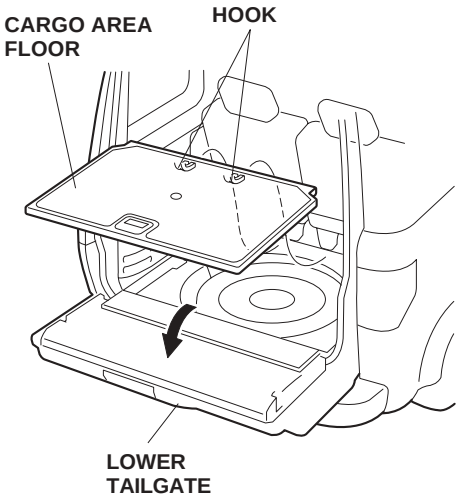

4. Raise the tailgate lower trim and remove the three self-tapping screws that fasten the tailgate lower trim. Remove the lower trim (two clips).

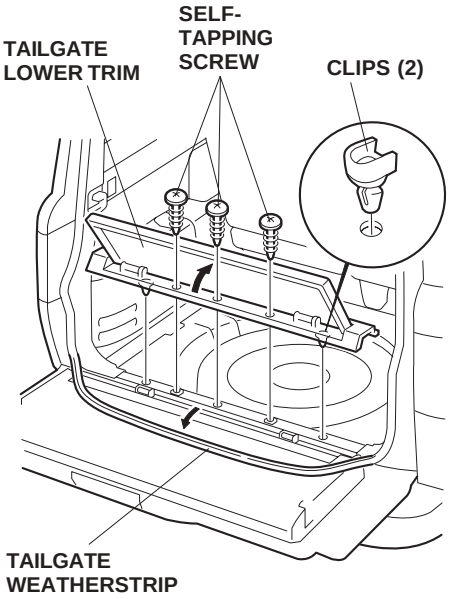

5. Remove the tailgate weatherstrip from the area shown.

© 2002 American Honda Motor Co., Inc - All Rights Reserved.

6. Pull up on the reclining strap to tilt the right rear seatback down, then remove the right rear seat side cover by pulling the hook in the direction shown to release the two hooks and four tabs.

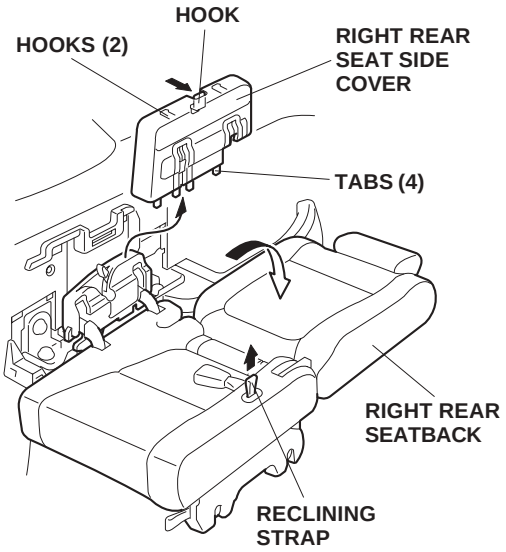

7. Unlock the right rear seat by pulling the right rear seat foot lock release strap out toward you.

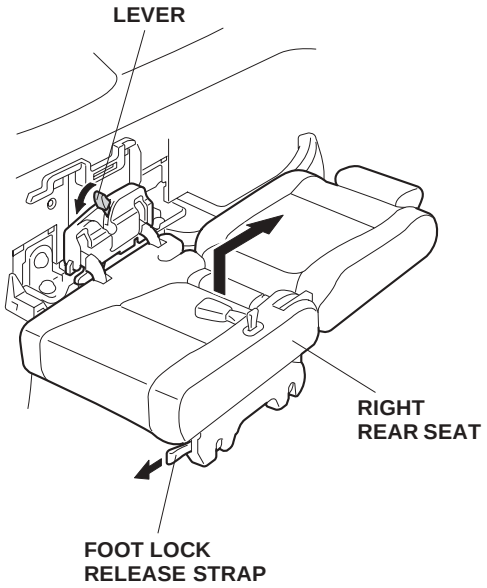

8. Push the lever in the direction shown, then remove the right rear seat by lifting the rear of the seat and sliding the seat through the rear of the vehicle.

9. Remove the tie-down hook from the right rear side trim panel (one screw).

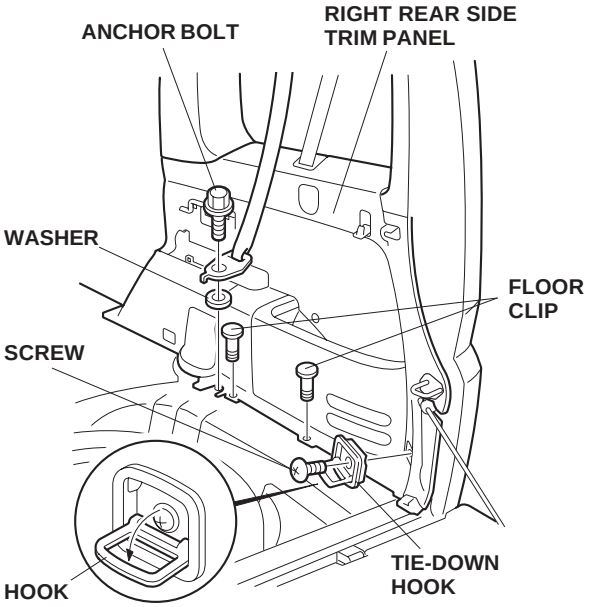

10. Remove the two floor clips.

11. Remove the anchor bolt and washer that fasten the seat belt.

12. Open the plastic covers and remove the self-tapping screws concealed under the covers. Open the cargo net hook plastic cover and remove the self-tapping screw concealed under the hook. Remove the self-tapping screw just behind the cargo net hook.

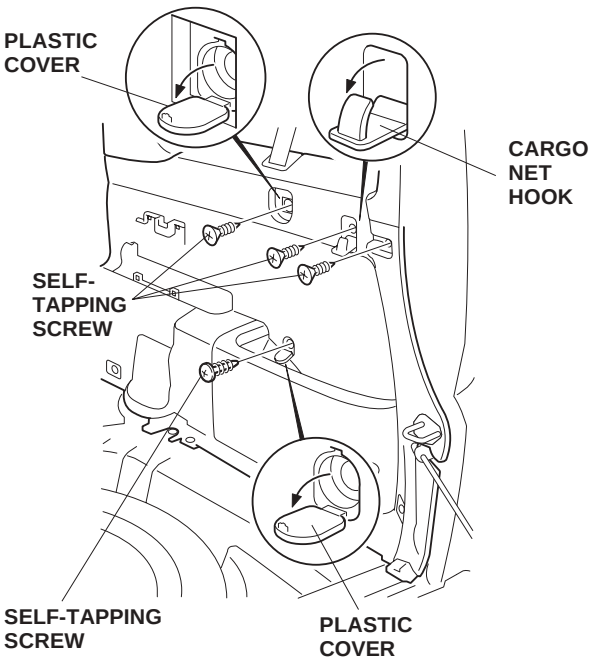

© 2002 American Honda Motor Co., Inc - All Rights Reserved.

13. Remove the right rear bulkhead cover from the right rear side trim panel (eight retaining tabs).

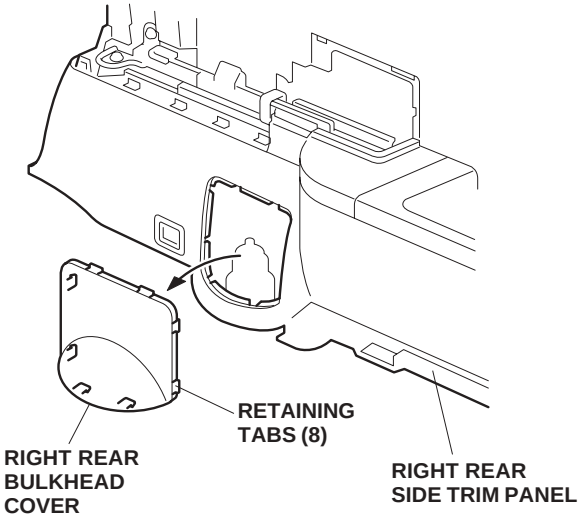

14. Remove the rear portion of the right rear side trim panel by pulling it out toward you (three clips and three retaining tabs). It is not necessary to remove the entire trim panel.

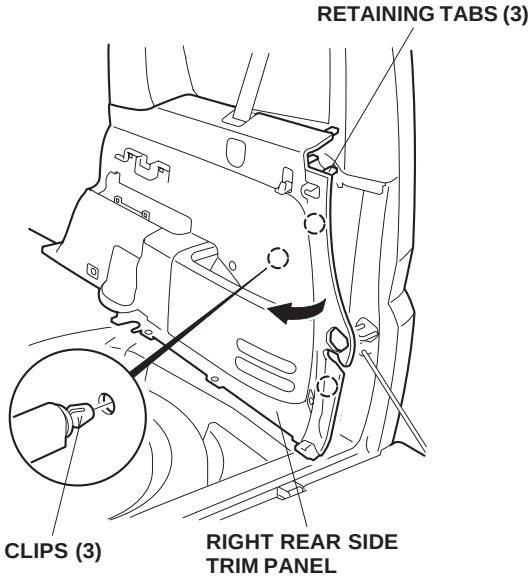

15. Remove and discard the cover from the right rear side trim panel. Slide the accessory socket into the vacant hole, and align the tab on the socket with the cutout in the panel.

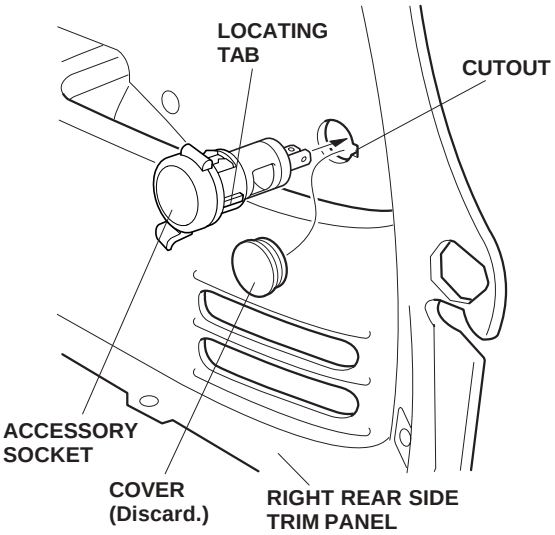

16. Behind the right rear side panel, locate the 2-pin connector blue-taped to the vehicle harness. Remove the blue tape to free the 2-pin connector, then plug the 2-pin connector into the accessory socket.

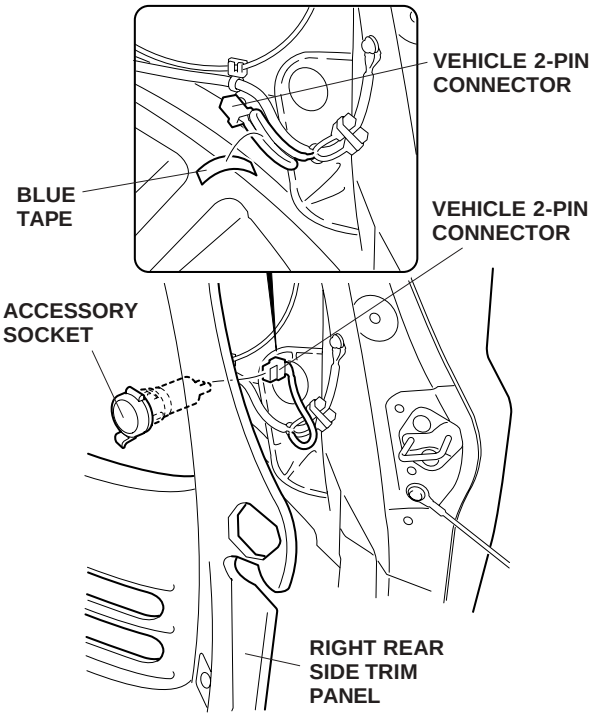

17. Reinstall the right rear side trim panel.

© 2002 American Honda Motor Co., Inc - All Rights Reserved.

18. Inside the vehicle, remove the stoppers from both sides of the glove box, and lower the glove box.

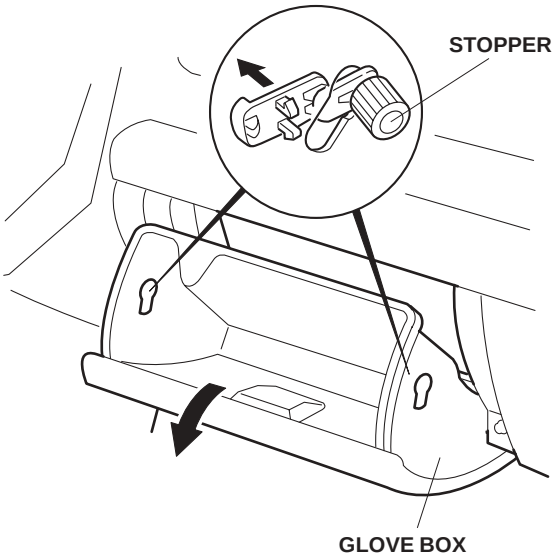

19. Install the relay into the relay block in the glove box opening.

With A/T:

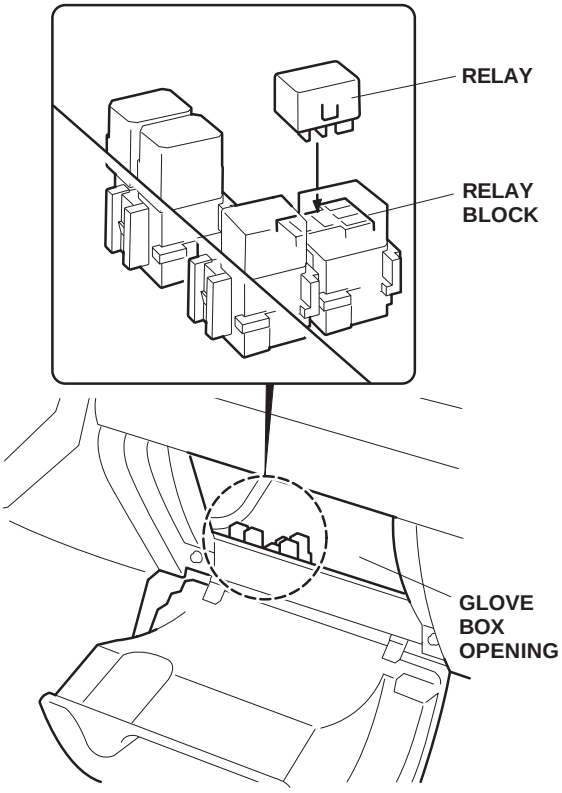

With M/T:

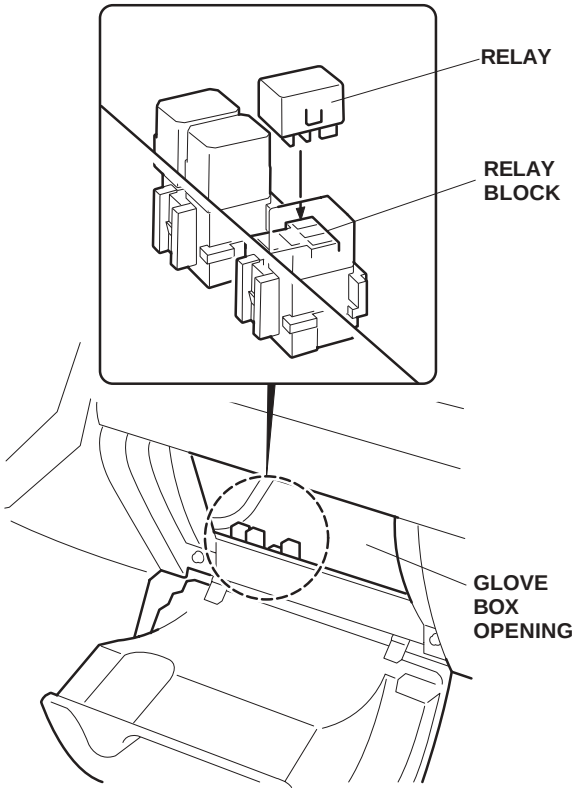

20. Test the accessary socket.
21. Reinstall all removed parts. Torque the seat belt anchor bolts to 30-34 N·m (3-3.5 kgf·m, 22-25 lb·ft).
22. Reconnect the negative cable to the battery.
23. Enter the customer's radio anti-theft code, if applicable, and reset the radio station presets.
24. Reset the clock.

    NOTE: Whenever the battery is disconnected, the driver's window AUTO function is disabled.
25. Start the engine. Push down on the driver's window switch until the window is fully open.
26. Pull up on the driver's window switch to close the window completely, then hold the switch for two seconds.
27. Lower and raise the driver's window to check operation of the driver's window AUTO function.

© 2002 American Honda Motor Co., Inc - All Rights Reserved.