www.HandA-Accessories.com

HONDA

INSTALLATION INSTRUCTIONS

Accessory	Application	Publications No.
SECURITY SYSTEM	ELEMENT	All 24307
		Issue Date DEC 2002

NOTE: An optional keyless entry system (sold seperately) must be installed before you can install the security system.

PARTS LIST

Security System
P/N 08E51-EP4-100

Security unit

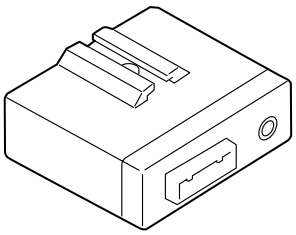

LED

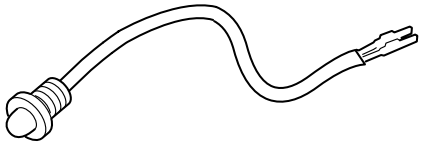

Push nut

2-pin connector (for LED)

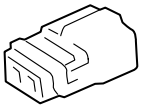

Microphone

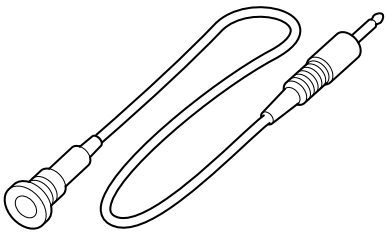

Window decal

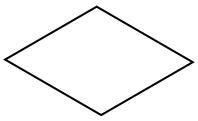

Owner's Manual

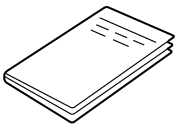

Security System Attachment
P/N 08E55-SCV-100

Security system harness

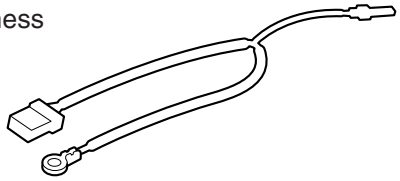

8 Wire ties

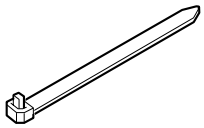

2 Cushion tapes

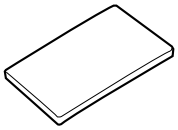

Wire tie with connector holder

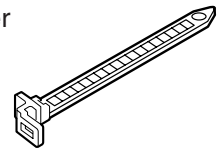

Holder bracket

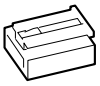

TOOLS AND SUPPLIES REQUIRED

Phillips screwdriver
Felt-tip pen
Tape measure
Eye protection (safety goggles, face shield, etc.)
Drill
3 mm, 5.5 mm, and 8 mm Bits
Isopropyl alcohol
Shop towel
Center punch
File
Diagonal cutters
Ratchet
10 mm Socket
Electrical tape

© 2002 American Honda Motor Co., Inc - All Rights Reserved.

Illustration of the Security System Installed on the Vehicle

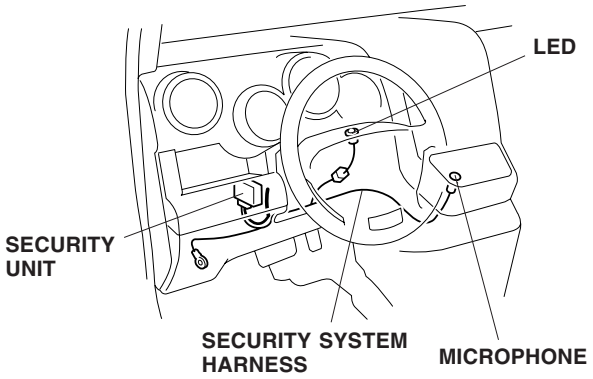

INSTALLATION

Customer Information: The information in this installation instruction is intended for use only by skilled technicians who have the proper tools, equipment, and training to correctly and safely add equipment to your vehicle. These procedures should not be attempted by “do-it-yourselfers.”

1. If equipped, make sure you have the anti-theft code for the radio, then write down the frequencies for the preset buttons.
2. Disconnect the negative cable from the battery.
3. Remove the driver’s dashboard lower cover, turn the knobs clockwise, then pull the lower cover out toward you to release the six retaining tabs.

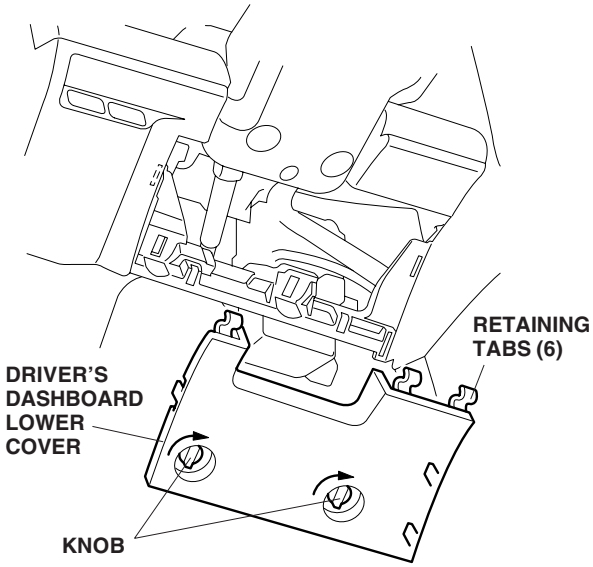

4. Lower the steering wheel using the tilt lever. Remove the two self-tapping screws and one washer-screw from the lower steering column cover. Separate the upper steering column cover from the lower steering column cover by gently pressing down on the six retaining tabs, and remove them.

   NOTE: To remove the upper steering column cover from the lower steering column cover, turn the steering wheel 90° clockwise, then press down on the area shown to release the retaining tab indicated so that the remaining tabs can easily be released.

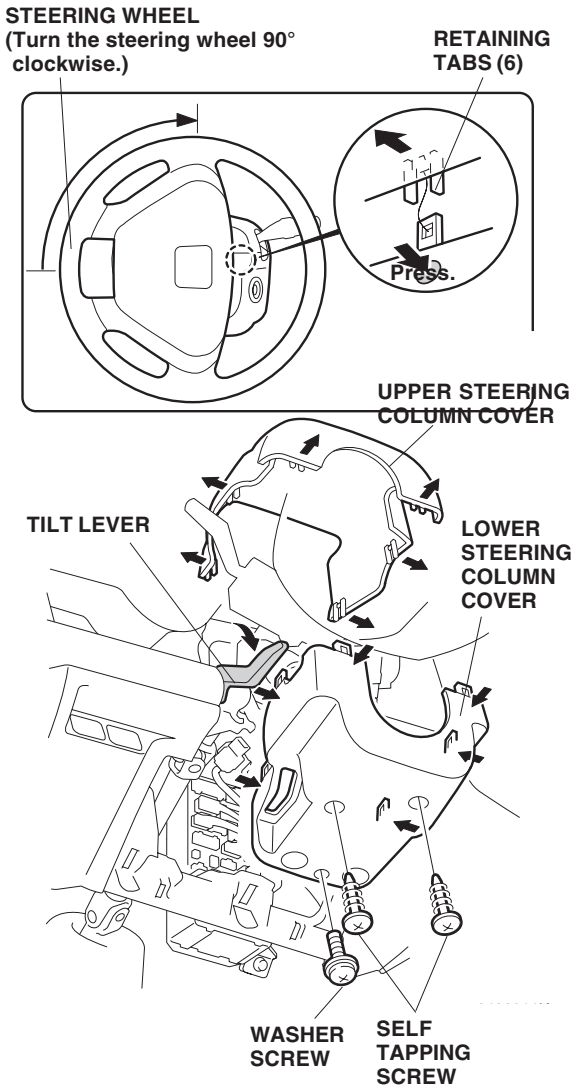

© 2002 American Honda Motor Co., Inc - All Rights Reserved.

5. Remove the center dashboard lower cover (two expansion clips, two clips and four retaining tabs).

   NOTE: This illustration shows the center lower cover with subwoofer. Remove the center lower cover without subwoofer the same way.

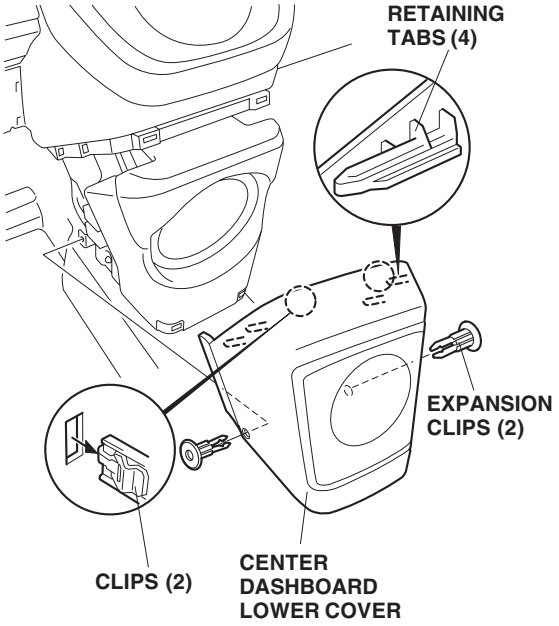

6. If the vehicle is equipped with a subwoofer, remove the bolts that fastens the subwoofer, unplug the connectors and remove the subwoofer.

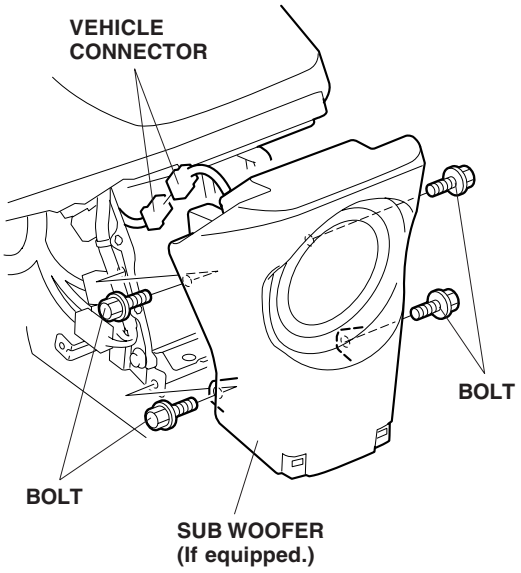

7. *On A/T model:* Use a hammer handle to push up on the shift lever cover to release the four retaining tabs and four clips. Unplug the hazard switch harness connector and remove the shift lever cover.

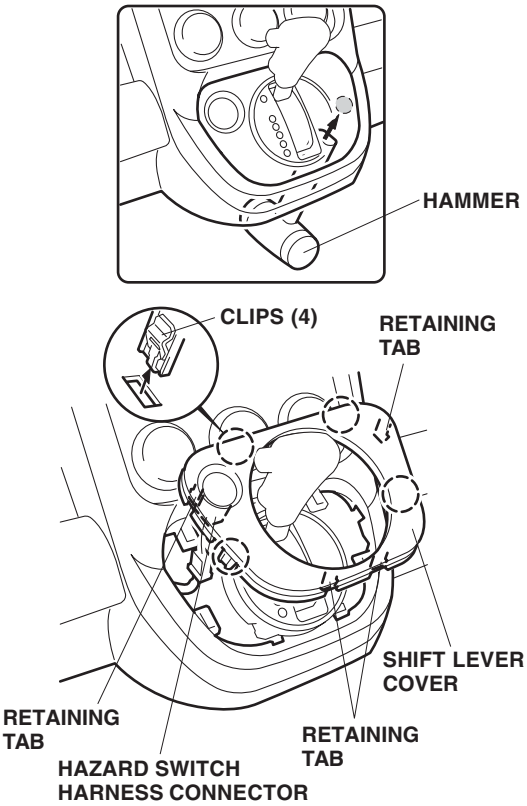

© 2002 American Honda Motor Co., Inc - All Rights Reserved.

8. *On M/T model:* Slide the top of the shift boot down away from the shift knob, then remove the shift knob by turning it counter-clockwise.

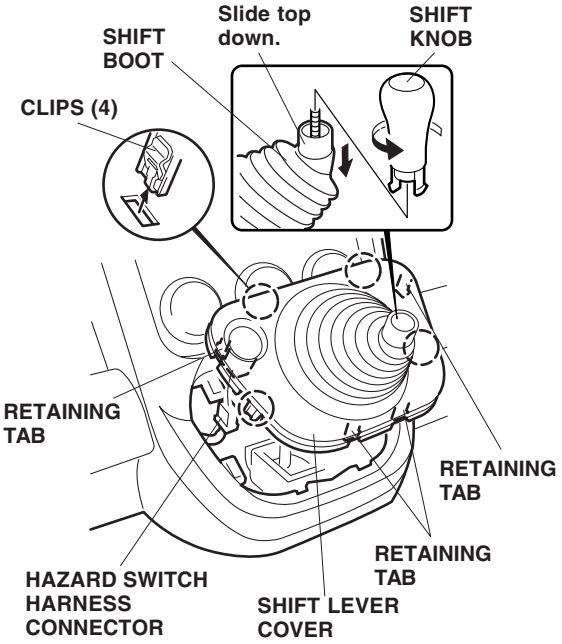

9. *On M/T model:* Reach through the shift boot, pull up the shift lever cover to release the four retaining tabs and four clips and unplug the hazard switch harness connector.

10. Measure and mark the upper steering column cover in the area shown.

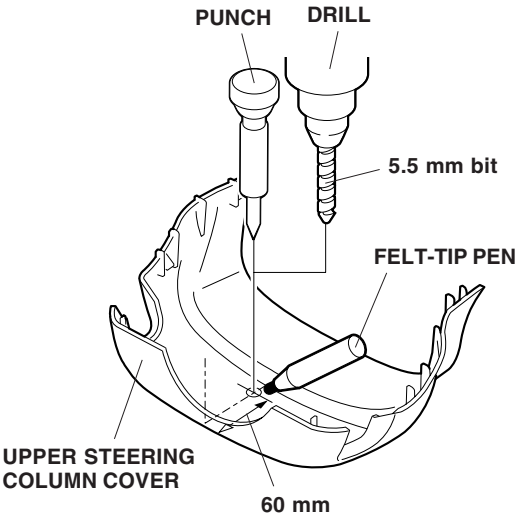

11. While wearing eye protection, lightly center-punch the mark and drill a 5.5 mm hole through the upper steering column cover. Remove all burrs.

12. Route the terminal ends of the LED through the hole and secure the LED with the push nut. Using isopropyl alcohol, clean the area where the cushion tape will attach. Secure the LED harness to the back of the upper column cover with one cushion tape.

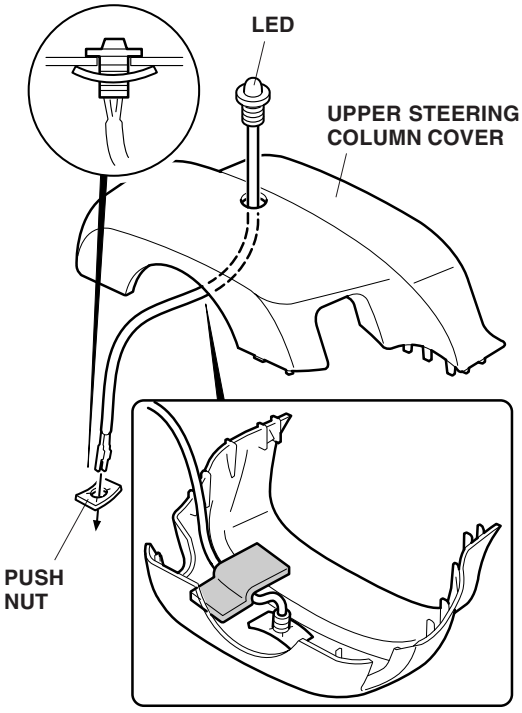

13. Locate the 2-pin connector from the kit. Firmly push the LED terminals into the 2-pin connector and lower the lock as shown.

NOTE: If the wires are not correctly installed in the connector, the LED will not work.

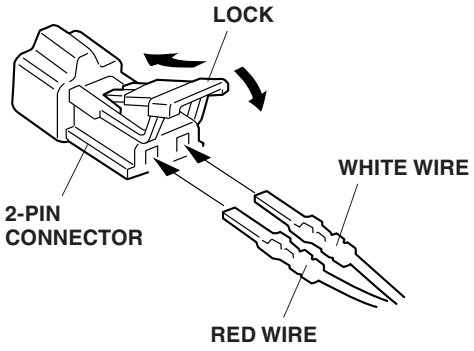

© 2002 American Honda Motor Co., Inc - All Rights Reserved.

14. Measure and mark the shift lever cover as shown.

A/T Model:

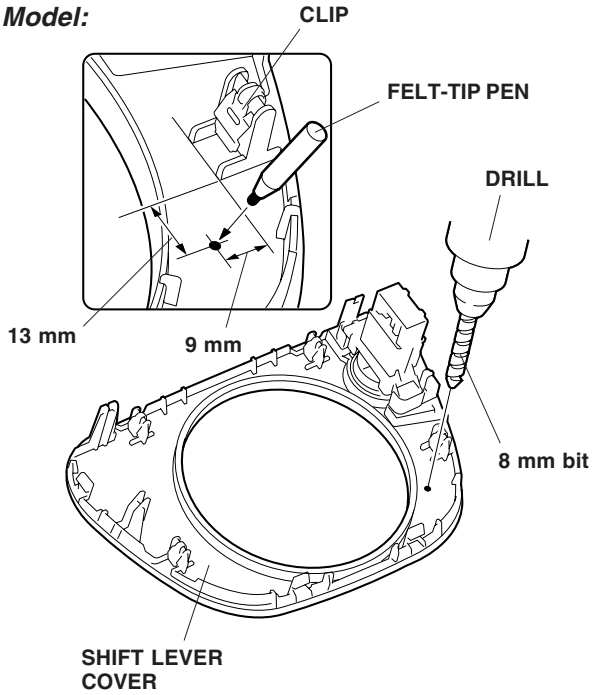

M/T Model:

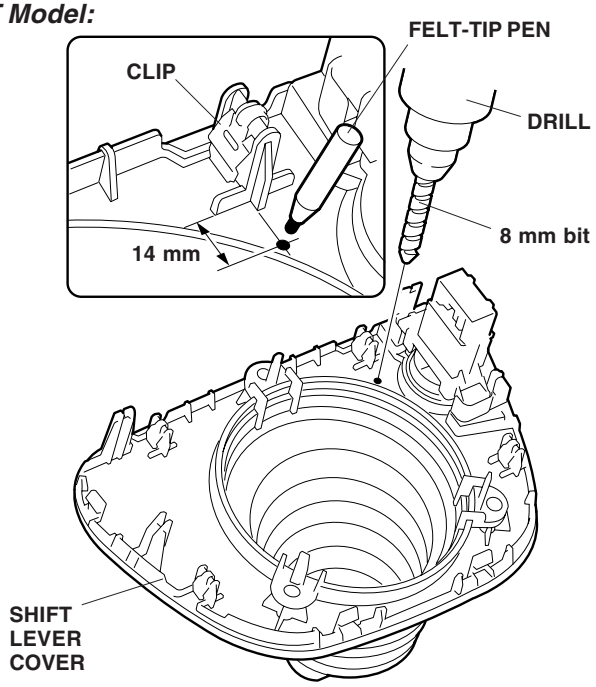

15. While wearing eye protection, lightly center-punch the mark and drill an 8 mm hole through the center-punched mark. Remove all burrs.

    - First drill a pilot hole with a 3 mm bit, then finish with an 8 mm bit.

16. Measure and mark the microphone cord in the area shown. Attach a piece of electrical tape to the microphone cord at the marked location.

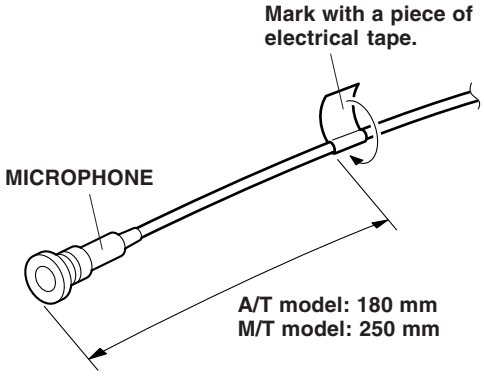

17. Route the microphone jack down through the hole in the shift lever cover and seat the microphone.

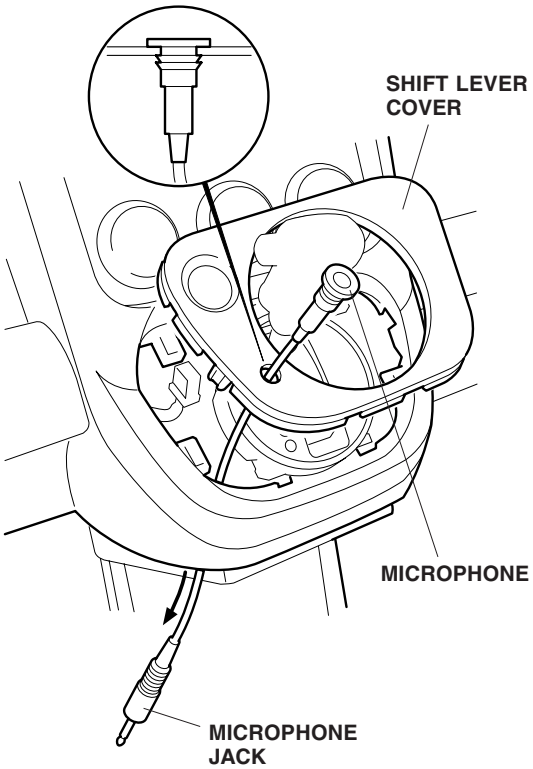

18. Reconnect the Hazard Switch Harness connector and reinstall the shift lever cover.

© 2002 American Honda Motor Co., Inc - All Rights Reserved.

19. Locate the 22-pin connector blue-taped to the vehicle harness and remove the blue tape to free the 22-pin connector. Remove the retainer from the 22-pin connector.

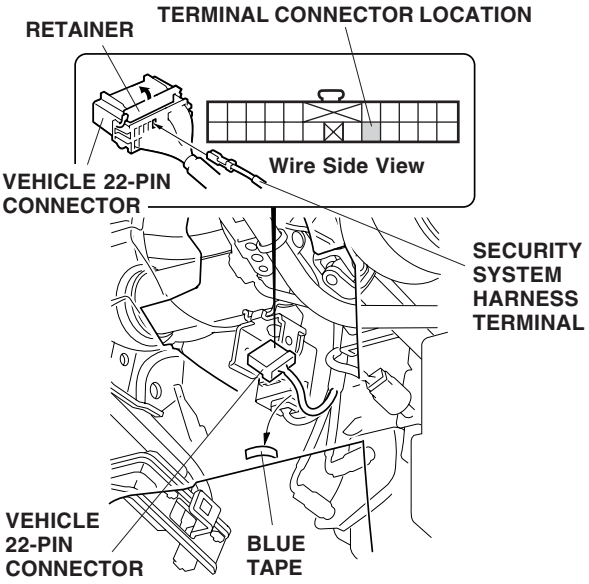

20. Push the security system harness terminal into the appropriate vehicle 22-pin connector terminal, then reinstall the retainer.

21. Unplug the vehicle 5-pin connector from the keyless unit. Remove the receiver bracket (one bolt).

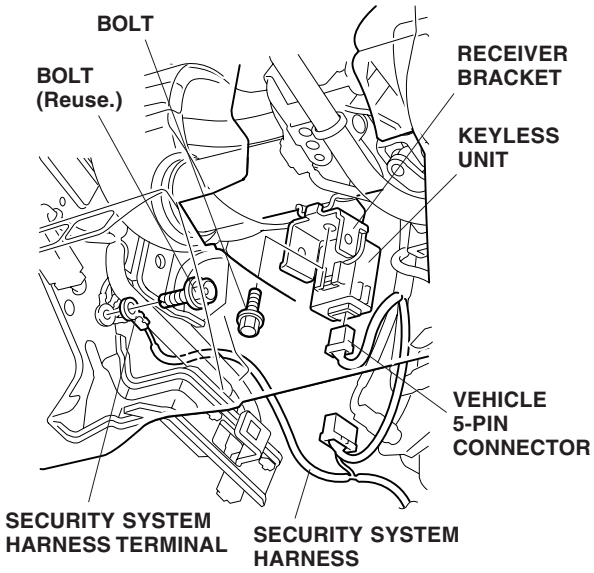

22. Remove the bolt that secures the vehicle ground terminal and attach the security system harness ground terminal with this bolt.

23. Slide the security unit into place on the keyless entry receiver bracket holder. Do not push the connector area.

- If the vehicle is equipped with an XM radio, refer to the XM radio installation instructions (08B15-SCV-100-91) for the installation procedure for installing the security unit.

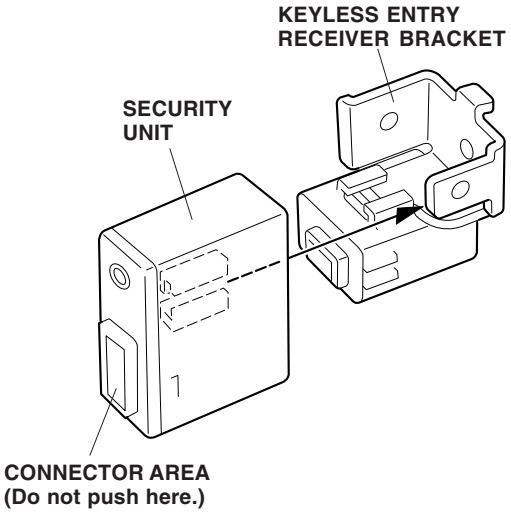

24. Plug the vehicle 22-pin connector into the security unit. Reinstall the receiver bracket.

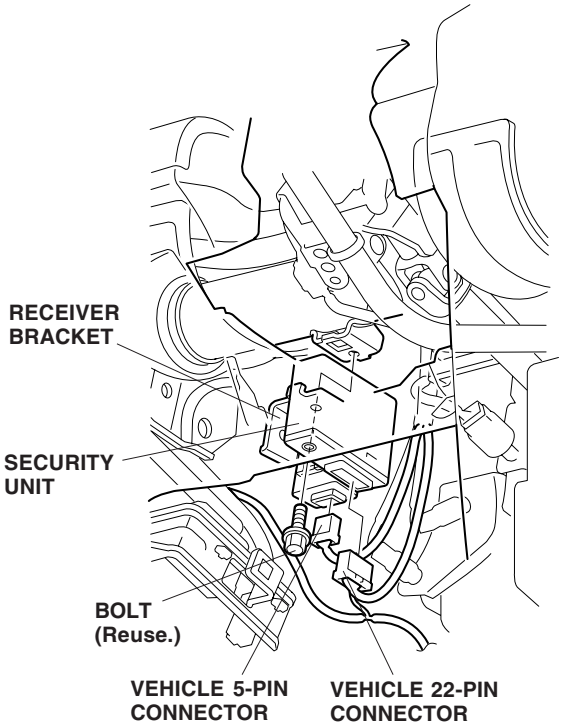

25. Reconnect the vehicle 5-pin connector to the keyless unit.

© 2002 American Honda Motor Co., Inc - All Rights Reserved.

26. Reinstall the upper steering column cover, then route the LED harness along the vehicle harness.

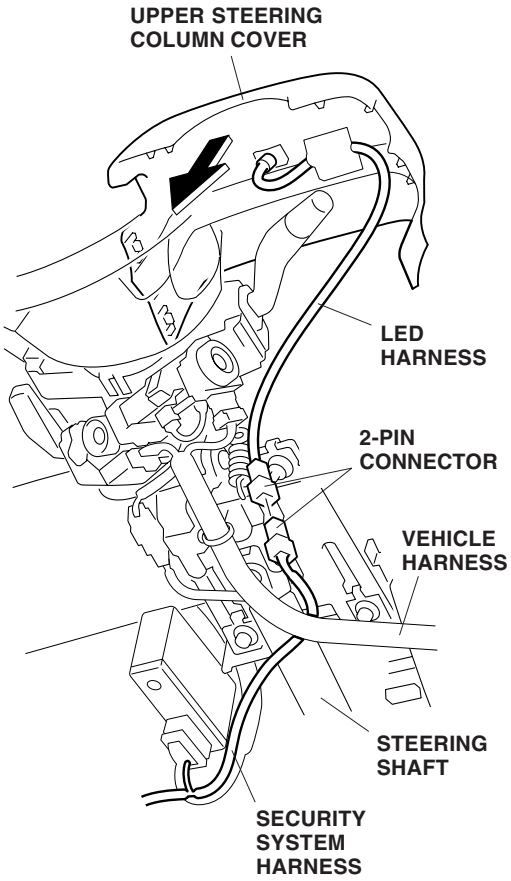

27. Route the security system harness 2-pin connector under the steering shaft and connect it to the LED harness 2-pin connector.

28. Slide the holder bracket onto the LED harness 2-pin connector and then onto the the wire tie with the connector holder. Secure the LED harness 2-pin connector to the vehicle harness.

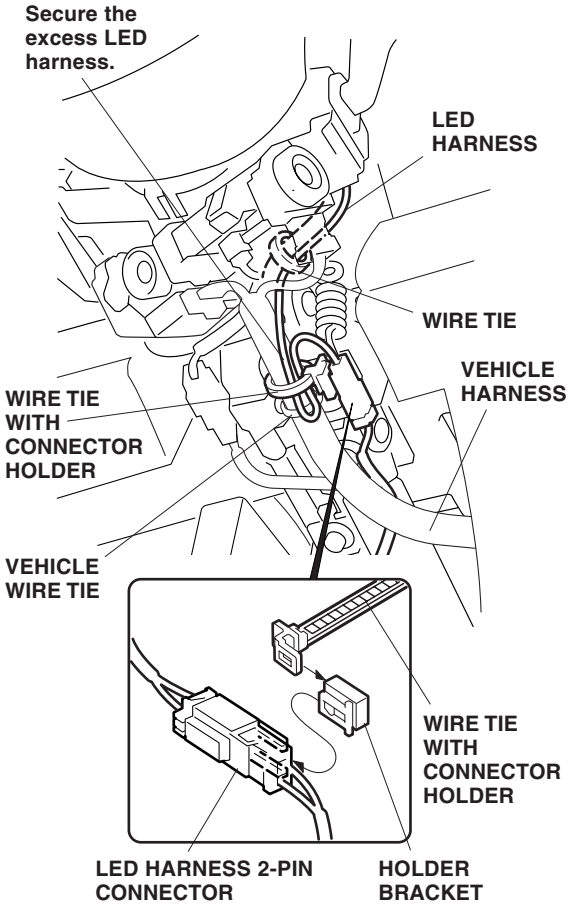

29. Secure the LED harness to the vehicle harness with one additional wire tie.

30. Reinstall the lower steering column cover to the upper steering column cover.

© 2002 American Honda Motor Co., Inc - All Rights Reserved.

31. Route the microphone jack along the vehicle harness and security harness, and plug it into the security unit.

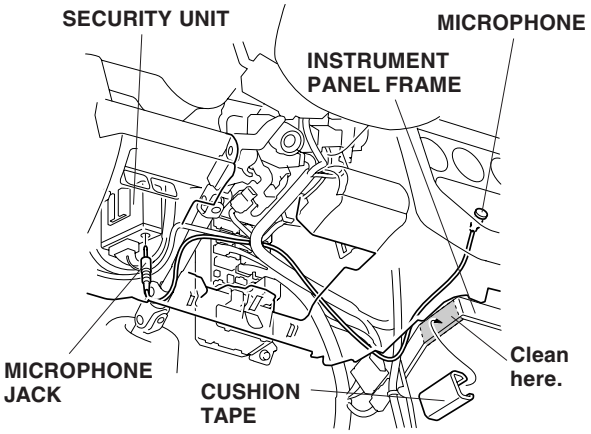

32. Using isopropyl alcohol, thoroughly clean the instrument panel frame where the cushion tape will attach. Attach the cushion tape to the instrument panel frame.

33. Secure the microphone harness to the instrument panel frame with one wire tie at the point where the electrical tape was attached in step 16.

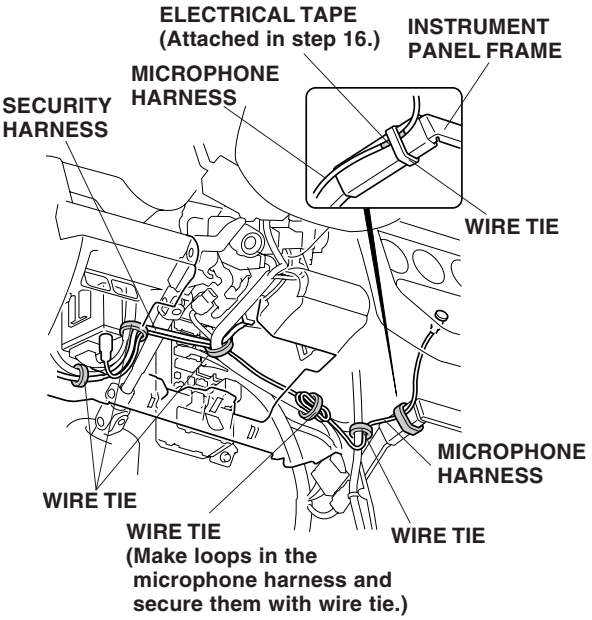

34. Attach the security harness and microphone harness to the vehicle harness with five wire ties in the areas shown.

    NOTE: Make loops in the excess microphone harness and secure the loops with one wire tie as shown.

35. Check that all wire harnesses and cables are routed properly and that all connectors are plugged in.

36. Reinstall all removed parts.

37. Reconnect the negative cable to the battery.

38. Enter the customer's radio anti-theft code and reset the radio station presets.

39. Reset the clock.

40. Check operation of the security system according to the Security System owner's manual.

    NOTE: Whenever the battery is disconnected, the driver's window AUTO function is disabled.

41. Start the engine. Push down on the driver's window switch until the window is fully open.

42. Pull up on the driver's window switch to close the window completely, then hold the switch for 2 seconds.

43. Lower and raise the window to check operation of the driver's window AUTO function.

© 2002 American Honda Motor Co., Inc - All Rights Reserved.